**Name:** SOLUTIONS

# BENG 186B Winter 2011

## Practice Final

- This exam is closed book, closed note, calculators are OK.
- Circle and put your final answers in the space provided; show your work only on the pages provided. Include units.
- Do not attach separate sheets. If you need more space, use the back of the pages.
- Points for each problem are given in [brackets], 100 points total.

| | |
|---|---|
| 1 | /10 |
| 2 | /16 |
| 3 | /8 |
| 4 | /8 |
| 5 | /8 |
| 6 | /10 |
| 7 | /10 |
| 8 | /8 |
| 9 | /10 |
| 10 | /8 |
| 11 | /4 |
| Total | /100 |

Useful schematics and equations

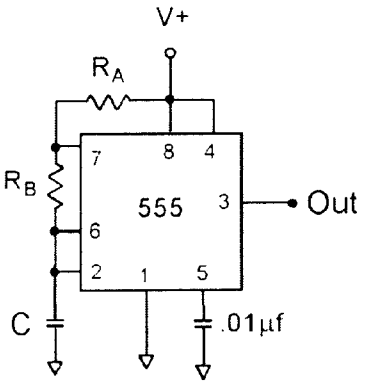


Oscillator

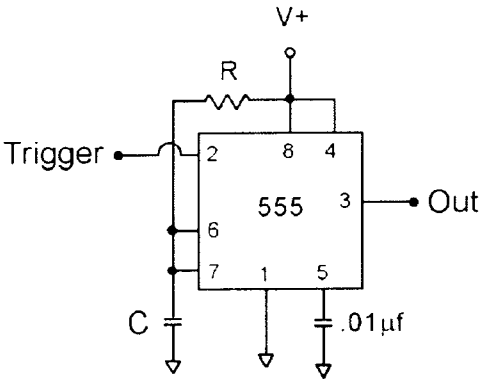


One-shot

Nernst Equation:

$$E = \frac{RT}{zF} \ln \frac{C_1}{C_2}$$

R = 8.3 J/(°K · mol)
T = °K
F = 96,500 C/mol
z = valence (unitless)

Common mode gain and differential gain:

$v_o = A_d\, v_d + A_c\, v_{cm}$
$v_d = v_a - v_b$
$v_{cm} = (v_a + v_b) / 2$

1. Circle the letter of the best (one and only one) answer for each. [10 pts; 1 pt each]

A) The bandwidth of an instrument is:

a) Centered around the natural frequency of the instrument
b) The range of frequencies in which the instrument works properly
c) The cut-off frequency normalized to the gain
d) Always less than the corner frequency of the Bode plot

B) In order to use the Fick method for determining cardiac output, what variables need to be measured?

a) heart rate, end-diastolic and end-systolic ventricular blood volumes
b) Doppler shift frequency, ultrasound source frequency, velocity of sound in the blood
c) mass of injected indicator, concentration of the downstream indicator vs. time
d) oxygen consumption, arterial and venous oxygen concentrations

C) What is the function of the capacitor in a standard DC power supply?

a) To regulate the output voltage to an exact DC value
b) To lower the AC amplitude to the desired value before it is regulated
c) To filter out the higher frequency components of the rectified AC signal
d) It can act as a current limiter, similar in function to a fuse

D) What does LVDT stand for:

a) Long-range variable differential transformer
b) Linear variable derivative transformer
c) Linear variable differential transformer
d) Linear varistor differential transistor
e) Linear variable differential transistor
f) Linear variable differential thermistor

E) If a strain of 0.008 increases the nominal resistance of a strain gauge by 1%, what is the gauge factor of the gauge?

a) 1.25
b) 0.8
c) 1.75
d) 2.0
e) 1.238

F) What does EMG stand for?

a) Encephalomagnetogram
b) Electromagnetogram
c) Encephalomyogram
d) Electromyogram
e) Extra muscular growth

G) Where are electrodes placed to measure ECoG?

a) Inside the brain
b) Surface of the scalp
c) Surface of the cortex
d) On the forehead
e) Spinal cord

H) Which of the following materials qualifies best as a polarizable electrode?

a) Ag
b) Ag/AgCl
c) Na
d) Cl
e) Pt

I) What does isFET stand for?

a) Ion-sensitive field effect transistor
b) Immunologically sensitive field effect transistor
c) Integrated sensor field effect transistor
d) Intravenous sensor field effect transistor
e) A molecule used to transduce oxygen partial pressure to electrical current

J) What is the let go current?

a) The bypass current of a biopotential amplifier
c) The minimum current that the subject can detect
b) The maximum current at which the subject can withdraw
d) The current that causes myocardial contraction
e) The flow of oxygen through the bloodstream

2) Short answer, write your answer only in the space provided. [16 pts; 2 pts each]

(a) Find the worst-case accuracy of Vo/Vi for the following amplifier circuit. Each of the 2 resistors has 10% tolerance, meaning each resistance can deviate from the "true" value by 10%. [2 pts]

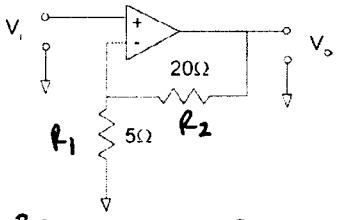


$$V_o = \left(1 + \frac{R_2}{R_1}\right) V_i$$

Nominal: $V_o/V_i = 1 + \frac{20}{5} = 5$

Worst case: $V_o/V_i = 1 + \frac{22}{4.5} = 5.9$

Worst-case accuracy:

$$\frac{5.9 - 5}{5} \times 100\% = 18\% \quad (20\% \text{ ok})$$

(b) An ECG amplifier has six different lead configurations, thus on the front of the instrument there is a switch to set the output to one of the 6 leads. Draw the schematic for a switch that could be used to switch between 6 different signals. [2 pts]

2P6T :

two pole, six throw

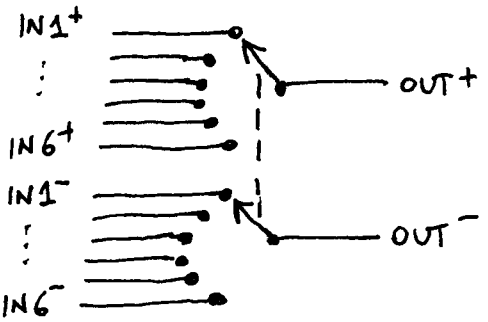


(c) What is the difference between a thermocouple and a thermistor? [2 pts]

thermocouple: temperature sensor with VOLTAGE output

thermistor: temperature sensor with RESISTANCE output

(d) What is the purpose of a relay? [2 pts]

a switch activated indirectly through a magnetic field

— can be activated in software

— does not require physical contact to the switch, for safe operation with high voltages

e) What is the difference between ENG and EMG? [2 pts]

ENG: electroneurogram : electric potentials induced by PNS activity

EMG: electromyogram : " " " " muscle "

(f) Sketch the 6 ECG lead vectors in the transversal plane. [2 pts]

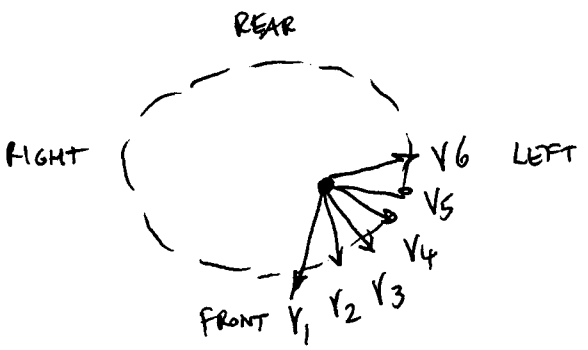


(g) What is $PCO_2$? [2 pts]

Partial pressure of $CO_2$ (carbon dioxide)

(h) What is rheobase current? [2 pts]

Stimulation threshold current for a current pulse of infinite duration (DC).

3) Find the Thevenin equivalent at the $V_o$ terminals in terms of the potentiometer resistance Rx. [8 pts]

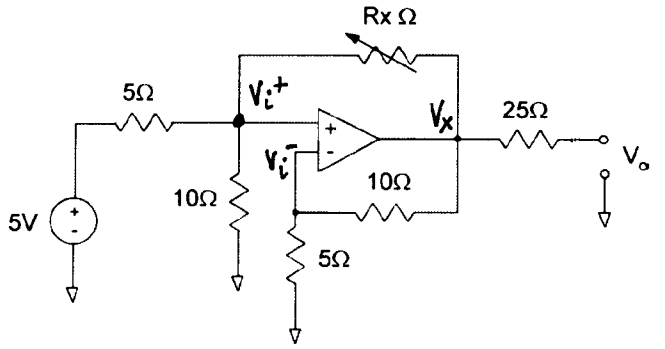


KCL @ $V_i^-$ : $\quad V_i^- = \frac{5\Omega}{15\Omega} \cdot V_x = \frac{V_x}{3}$

KCL @ $V_i^+$ : $\quad \frac{5V - \frac{V_x}{3}}{5\Omega} - \frac{\frac{1}{3}V_x}{10\Omega} + \frac{V_x - \frac{V_x}{3}}{R_x\ \Omega} = 0$

$$\Rightarrow \quad 1A - \frac{V_x}{15\Omega} - \frac{V_x}{30\Omega} + \frac{2V_x}{3R_x\Omega} = 0$$

$$\Rightarrow \quad V_x = \frac{1}{\frac{1}{10} + \frac{2}{3R_x}} V$$

- $V_{TH} = V_{oc} = V_x$ because no current flows across 25Ω resistor.
- $R_{TH} = 25\Omega$ because opamp output with feedback has zero node impedance (voltage does not change with current)

$\Rightarrow$

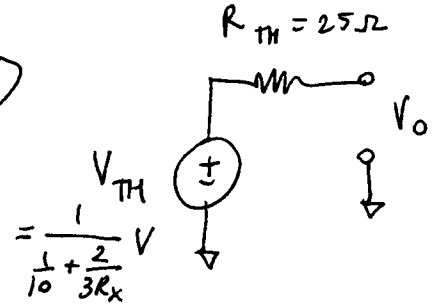

4a) Find the input impedance as seen at the $V_{in}$ terminal for the following instrument. [5 pts]

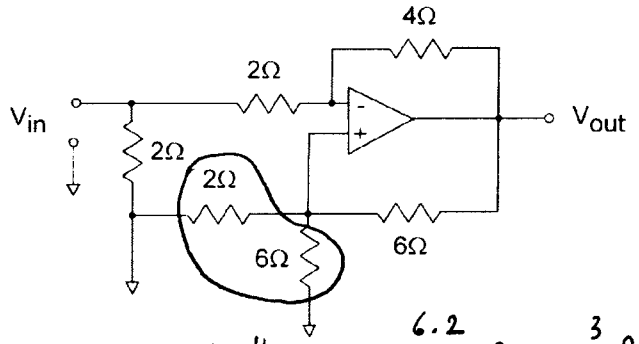


$$6\Omega \| 2\Omega = \frac{6 \cdot 2}{6+2}\,\Omega = \frac{3}{2}\,\Omega$$

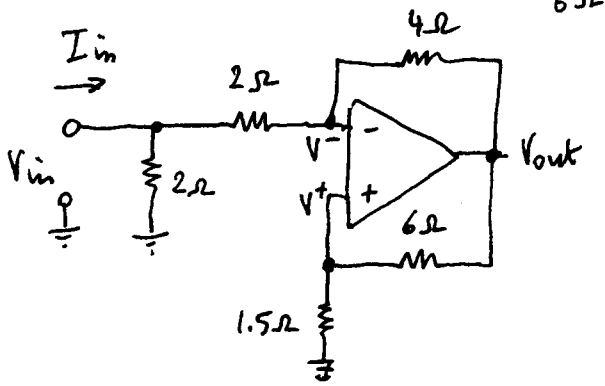


- KCL @ $V^+$: $V^+ = \frac{1.5}{1.5+6} \cdot V_{out} = \frac{1}{5} \cdot V_{out}$

- KCL @ $V^-$; $V_{in}$ —2Ω— $V^-$ —4Ω— $V_{out} = 5V^-$

$$\frac{V_{in} - V^-}{2\Omega} = \frac{V^- - 5V^-}{4\Omega} \Rightarrow V^- = -V_{in}$$

- KCL @ $V_{in}$: $I_{in} = \frac{V_{in}}{2\Omega} + \frac{V_{in} - V^-}{2\Omega} = \frac{V_{in}}{2\Omega} + \frac{2V_{in}}{2\Omega} = \left(\frac{1}{2\Omega} + \frac{1}{1\Omega}\right) \cdot V_{in}$

$$\Rightarrow Z_{in} = \frac{V_{in}}{I_{in}} = \frac{1}{\frac{1}{2\Omega} + \frac{1}{1\Omega}} = \frac{2}{3}\,\Omega$$

b) For the ideal op-amp case, find the output impedance of this circuit (assume $V_{in}$ is connected and non-zero). How would it change for a typical non-ideal opamp? [3 pts]

$0\,\Omega$

non-ideal opamp $\Rightarrow$ finite gain and finite output impedance

5) Assume the exact ECG signal as shown below is applied to the Vin terminal of the circuit below. Sketch the resulting waveform at test point "A" and at Vout in the blank boxes below the ECG, using the same time scale for all of the plots. The LM311 is a comparator (with Vout = On when Vin > Vref), and assume that the 555 timer triggers on a "down" pulse, i.e. it triggers when the input changes from +5 to 0V. The time constant of the one-shot is t = 1.1RC. [8 pts]

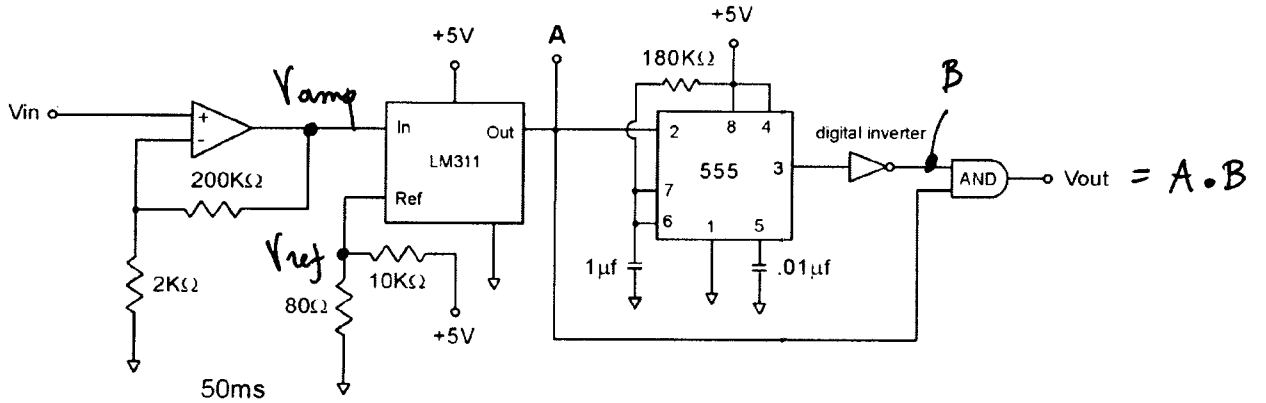


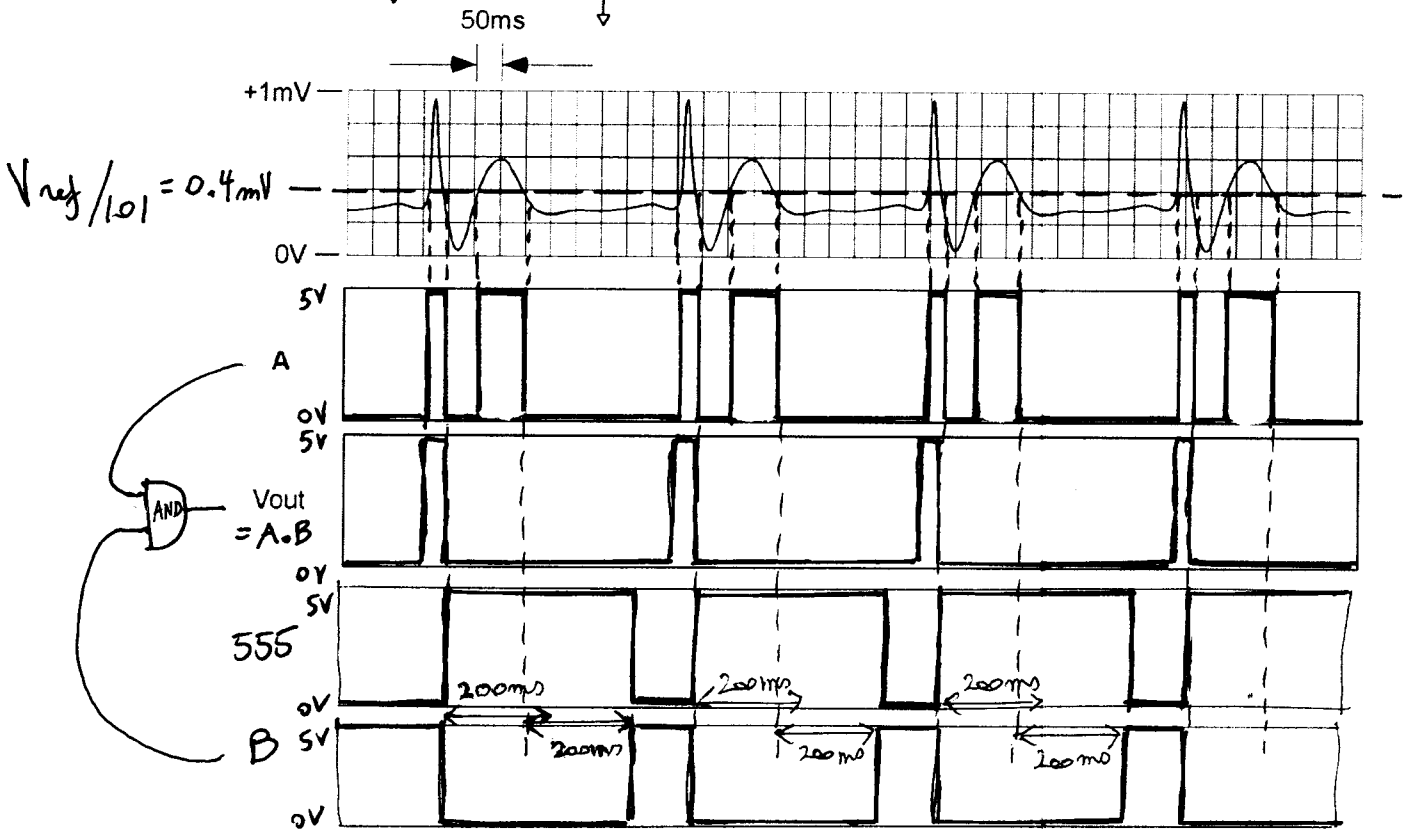


$$V_{amp} = \left(1 + \frac{200k\Omega}{2k\Omega}\right) V_{in} = 101\, V_{in}$$

$$V_{ref} = \frac{80\Omega}{10k\Omega + 80\Omega} \cdot 5V \approx .008 \cdot 5V = 40\,mV$$

$$A = +5V \text{ when } V_{amp} > V_{ref}$$

$$\text{or } V_{in} > \frac{V_{ref}}{101} = 0.4\,mV$$

555: $t = 1.1\,RC$

$= 1.1 \cdot 180k\Omega \cdot 1\mu F$

$\cong 200\,ms$

for EACH falling edge of A.

$G = 2$

$E = 2.5\,MPa$

6) Consider a Wheatstone bridge where one arm is a 50 kΩ strain gauge (G = 2.0). This strain gauge is bonded to a metal fixture as shown for tensile loading, and the metal has a Young's Modulus = 2.5 MPa. The other 3 arms are fixed 50 kΩ resistors. The bridge is powered by 5V DC as shown, and $E_o$ is the output voltage.

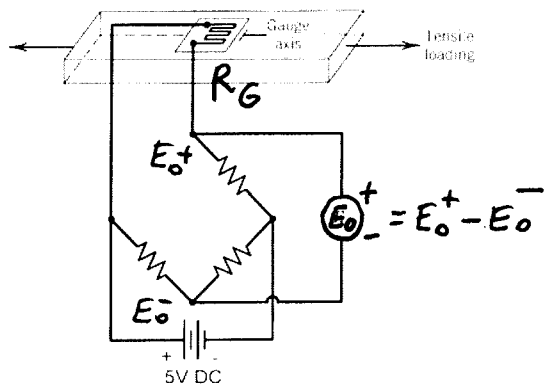


a) Derive a relationship for $E_o$ as a function of tensile stress σ in the metal substrate. [6 pts]

$$E_o^- = \frac{1}{2} \cdot 5V$$

$$E_o^+ = \frac{50k\Omega}{50k\Omega + R_G} \cdot 5V$$

$$R_G = 50k\Omega\,(1 + G \cdot \varepsilon) = 50k\Omega\left(1 + \frac{G}{E} \cdot \sigma\right)$$

$$\Rightarrow E_o = E_o^+ - E_o^- = \left(\frac{1}{2 + \frac{G}{E}\sigma} - \frac{1}{2}\right) 5V \approx -\frac{1}{4}\frac{G}{E}\sigma \cdot 5V$$

where $\frac{G}{E} = \frac{4}{5}\frac{1}{MPa}$

$$\approx -1\,\frac{V}{MPa} \cdot \sigma$$

b) Sketch a circuit that connects to the Wheatstone bridge and that outputs a voltage $V_{out}$ that is approximately linear in tensile stress σ. $V_{out}$ should be +2.5V when the tensile stress is zero, and approximately +4.5V when the tensile stress is 1 kPa. You may use opamps and resistors, and the +5V DC supply of the Wheatstone bridge with the negative terminal connected to ground. (*Bonus*: 4 points extra if you come up with a circuit that is exactly linear!). [4 pts + 4 pts bonus]

Required gain from $E_o$ to $V_{out}$: $-2{,}000$ so that

$-1\ V/MPa$ in $E_o$ $\rightarrow$ $2\ V/kPa$ in $V_{out}$

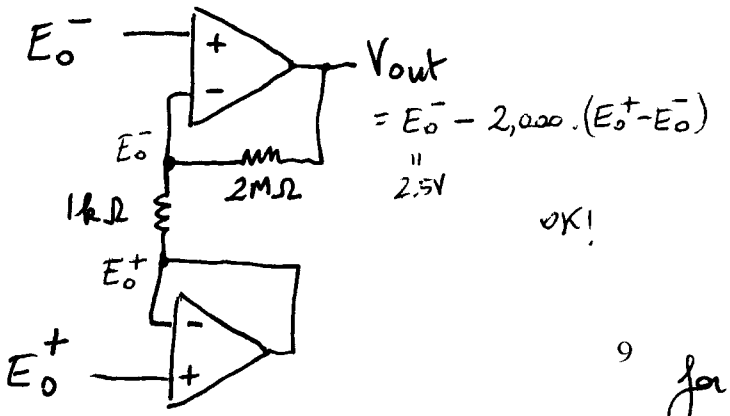


OK!

NOT exactly linear because $E_o^+ - E_o^-$ is slightly nonlinear in σ.

for the BONUS: come see us!

7) A Ag/AgCl electrode is immersed in a solution of HCl in pure water with pH = 3. A second Ag/AgCl electrode is immersed in a solution of 10mmol/L sea salt (NaCl) in pure water. Both solutions are at room temperature and separated by a membrane that is permeable to $Cl^-$ only. For each Ag/Ag/Cl electrode, the half cell potential is $E_{hc}$ = 0.223 V, and the impedance parameters are $R_d$ = 160 kΩ, $C_d$ = 10 pF, and $R_s$ = 100 Ω.

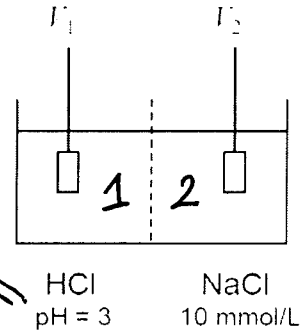


$[H^+]_1 = 10^{-3}$ mol/L and $[Cl^-]_1 \approx [H^+]_1$

Each Ag/AgCl electrode:

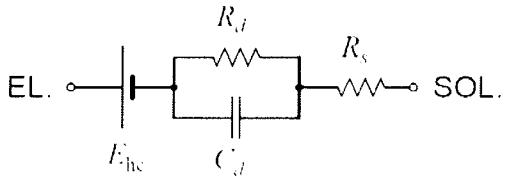


a) Find the pH of the NaCl solution. [2 pts]

salt ⇒ pH = 7 (as for pure water)

b) Find the voltage $V_1 - V_2$ measured between the two electrodes by a voltmeter with infinite input impedance. [4 pts]

$$V_1 - V_2 = -\frac{RT}{F} \ln \frac{[Cl^-]_2}{[Cl^-]_1} = -62\,\text{mV} \cdot \log_{10} \frac{10\ \text{mmol/L}}{1\ \text{mmol/L}} = -62\ \text{mV}$$
$(z=-1)$

c) Assuming that the electrical resistance between the solutions for transport of chloride through the membrane is $R_{mem}$ = 1 kΩ, find the equivalent impedance between the two electrodes. Sketch the magnitude of the impedance as a function of frequency. On your graph denote and quantify the corner frequency $f_c$, and the value of effective resistance at zero and infinite frequencies. [4 pts]

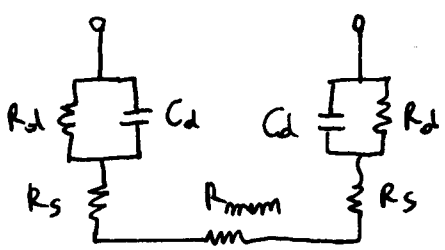


$$\Rightarrow Z \approx R_{mem} + 2\left(R_s + R_d \,\|\, \frac{1}{j\omega C_d}\right)$$

$$= R_{mem} + 2R_s + \frac{2R_d}{1 + j\omega R_d C_d}$$

$$= 1.2\ \text{k}\Omega + \frac{320\ \text{k}\Omega}{1 + j\omega\tau}$$

with $\tau = R_d C_d = 160\ \text{k}\Omega \cdot 10\text{pF} = 1.6\ \mu\text{s}$

$$\Rightarrow f_c = \frac{1}{2\pi\tau} = \frac{1}{10\ \mu\text{s}} = 100\ \text{kHz}$$

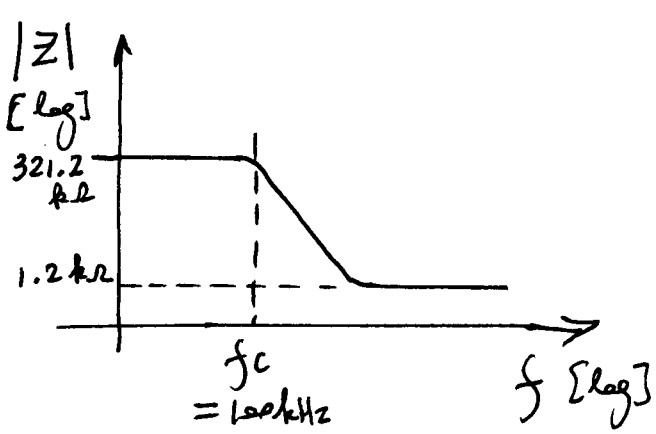

8) Consider the 12-lead electrocardiogram below:

a) Indicate the R wave peak for each of the 6 leads in the frontal plane: place a cross mark at the peak of at least one R wave for each. [4 pts]

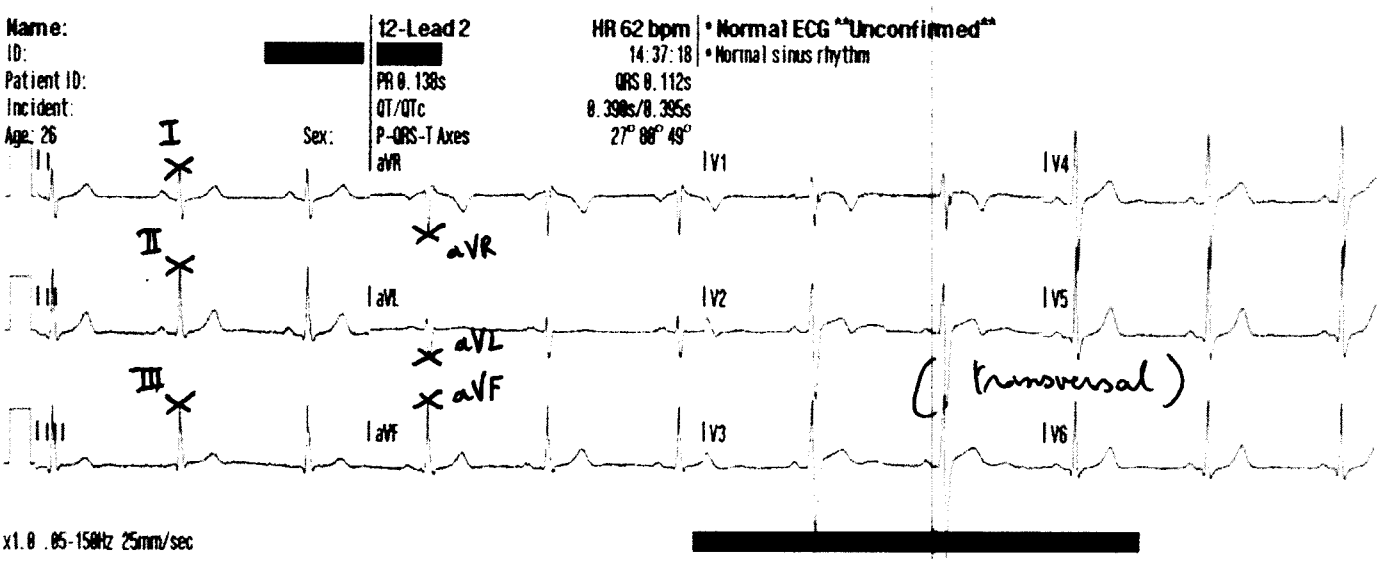


b) Based on what you observe, what can you say about the position of the cardiac vector in the frontal plane at the R wave, and why? Sketch the direction of the cardiac vector in the frontal plane, in relation to the 6 lead vectors. *Hint*: You may assume that for each of the leads the corresponding ECG signal is $V_a = \mathbf{M} \cdot \mathbf{a}$, where $\mathbf{M}$ is the cardiac vector, and $\mathbf{a}$ is the lead vector. [4 pts]

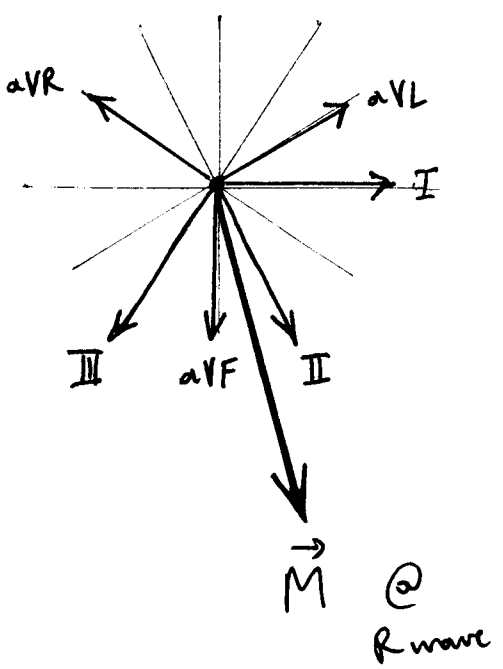


R wave is maximum between II and aVF and negative for aVL and aVR

$\Rightarrow$ $\vec{M}$ points towards $\vec{aVF}$ and $\vec{II}$

9) Consider the differential biopotential amplifier below, with resistance values $R_1 = 1\ \text{M}\Omega$, $R_2 = 5\ \text{k}\Omega$, and $R_3 = 1\ \text{M}\Omega$.

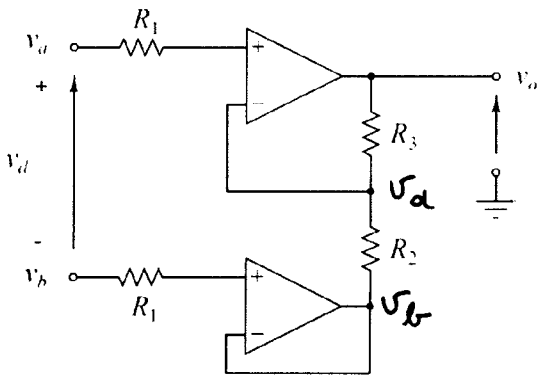


(all opamps ideal)

a) Find the input impedance at the $v_a$ and $v_b$ nodes to ground, and the output impedance at the $v_o$ node to ground. [3 pts]

$Z_{in}$ @ $v_a$ : $\infty$
$Z_{in}$ @ $v_b$ : $\infty$ } because opamps take no input current
$Z_{out}$ @ $v_o$ : $0$ because of infinite gain in the opamp

b) Find the differential gain $A_d$, common gain $A_c$, and common mode rejection ratio CMRR. [7 pts]

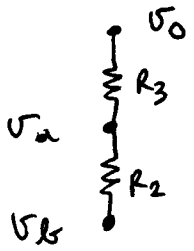


$$\Rightarrow v_o = v_b + \frac{R_2 + R_3}{R_2}(v_a - v_b)$$

where $\begin{cases} v_a = v_{cm} + \frac{v_d}{2} \\ v_b = v_{cm} - \frac{v_d}{2} \end{cases}$

$A_d$ : $v_{cm} = 0 \Rightarrow \begin{cases} v_a = \frac{v_d}{2} \\ v_b = -\frac{v_d}{2} \end{cases} \Rightarrow v_o = -\frac{v_d}{2} + \frac{R_2+R_3}{R_2} \cdot v_d$

$$\Rightarrow A_d = \left.\frac{v_o}{v_d}\right|_{v_{cm}=0} = \frac{R_2+R_3}{R_2} - \frac{1}{2} = 200.5$$

$A_c$ : $v_d = 0 \Rightarrow v_a = v_b = v_{cm} \Rightarrow v_o = v_{cm}$

$$\Rightarrow A_c = \left.\frac{v_o}{v_{cm}}\right|_{v_d=0} = 1$$

$$\text{CMRR} = \frac{A_d}{A_c} = 200.5 \quad (46\ \text{dB})$$

10) Consider the DRL system below, with electrode resistances $R_{RA} = R_{LA} = R_{LL} = R_{RL} = 130\ \text{k}\Omega$, and with circuit resistances $R_a = 10\ \text{k}\Omega$, $R_f = 2\ \text{M}\Omega$, and $R_o = 1\ \text{M}\Omega$.

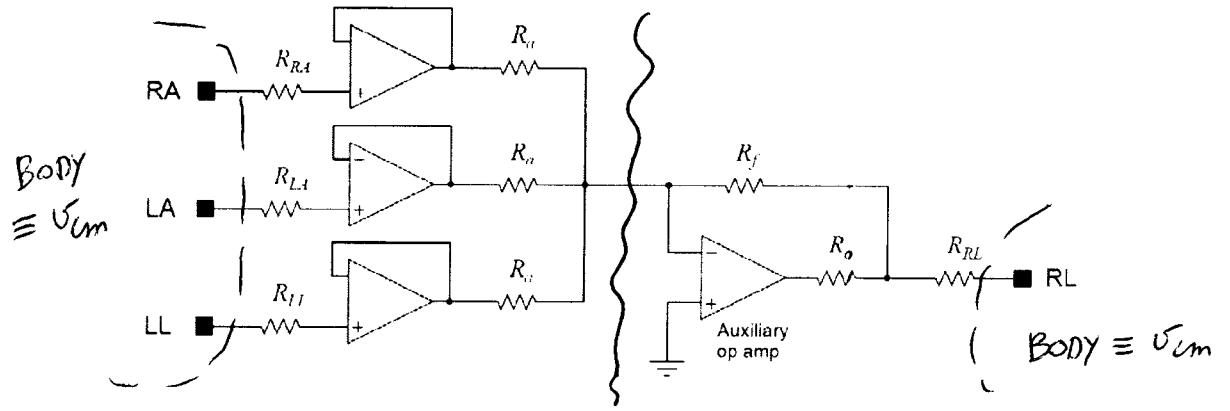


a) Find the effective resistance between the RL terminal and ground. [5 pts]

Thevenin equivalent:

for RA=LA=LL=$v_{cm}$

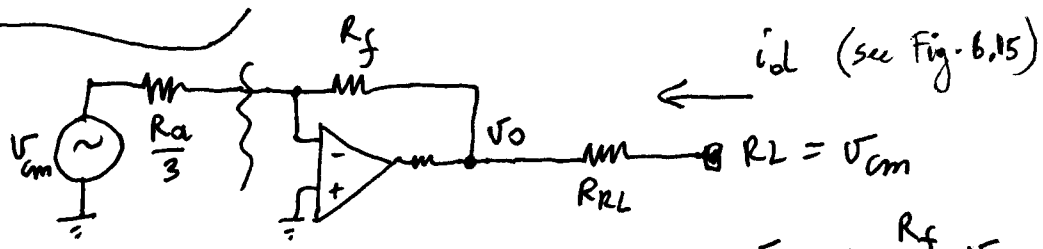


$$v_o = -\frac{R_f}{R_a/3} \cdot v_{cm} \Rightarrow i_d = \frac{v_{cm} + \frac{R_f}{R_a/3} v_{cm}}{R_{RL}}$$

$$\Rightarrow R_{eff} = \frac{v_{cm}}{i_d} = \frac{R_{RL}}{1 + \frac{3R_f}{R_a}} = \frac{130\ \text{k}\Omega}{1 + \frac{6\ \text{M}\Omega}{10\ \text{k}\Omega}} \approx \frac{130\ \text{k}\Omega}{600} \approx 217\ \Omega$$

b) Explain the effect of the resistance $R_o$ on the electrical safety of the subject and the instrument. [3 pts]

$R_o$ limits the current that can be delivered by the auxiliary opamp to the body, as a protection against ground faults.

11) Questions from 2 guest lectures as promised. Please write answer only in the space provided.

Wireless Non-contact ECG and EEG [2 pts]

a) What are some of the problems with "sticky" electrodes for ECG?

- skin irritation and patient discomfort, leading to possible non-compliance
- gel dries out after relatively short time (several hours)

b) Why does hair on the scalp interfere with EEG measurement, and what are some of the ways around this problem?

- hair is a poor insulator, leading to friction-induced static discharge
- some solutions: apply gel, or shave!

Wireless and Global Health Care [2 pts] (from Dr. Saldivar's 2010 lecture which was different)

a) In what country does 97% of the population have electronic medical records?

Belize (source: www.populusgs.com)

b) When thinking about wireless technology and its applications to health care, according to Dr. Saldivar it is better to "think backward" from some traditional engineering approaches. What did he mean by "think backward"?

Find simple solutions to simple problems, rather than resorting to high tech where it is not needed.