BENG 186B Winter 2013

Quiz 1

January 25, 2013

NAME (Last, First) SOLUTIONS

- This quiz is closed book, closed notes, you may use a calculator for algebra.
- Circle your final answers and show your work on the pages provided.
- Do not attach separate sheets. If you need more space, use the back of the pages.
- Points for each problem are given in [brackets], 100 points total. The quiz is 50 minutes long.

1	/25
2	/35
3	/20
4	/20
Total	/100

1. [**25 pts**] Find the Thévenin equivalent at V_o for the following circuit:

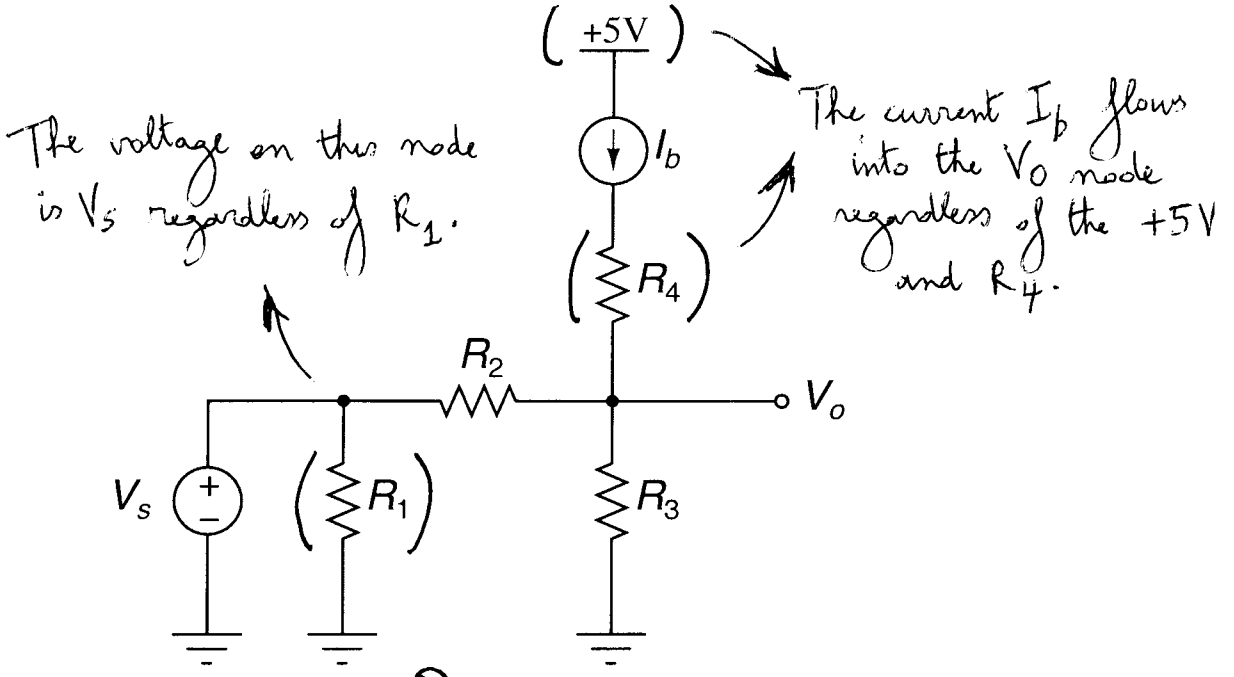

- V_{TH} :

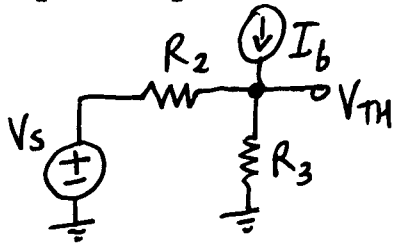

KCL @ V_{TH} : $\dfrac{V_s - V_{TH}}{R_2} - \dfrac{V_{TH}}{R_3} + I_b = 0$

$$\Rightarrow V_{TH} = \frac{\frac{V_s}{R_2} + I_b}{\frac{1}{R_2} + \frac{1}{R_3}} = \frac{R_3 V_s + R_2 R_3 I_b}{R_2 + R_3}$$

(1. continued)

Alternative solution (among many others!):

Linear superposition:

- $I_b = 0$: $V_s \neq 0$

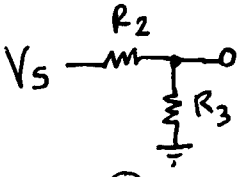

$$V_{TH} = \frac{R_3}{R_2+R_3} V_s$$

- $I_b \neq 0$: $V_s = 0$

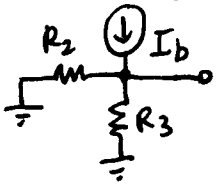

$$V_{TH} = (R_2 \| R_3) \cdot I_b = \frac{R_2 R_3}{R_2+R_3} I_b$$

$$\Rightarrow \quad V_{TH} = \frac{R_3}{R_2+R_3} V_s + \frac{R_2 R_3}{R_2+R_3} I_b$$

- Z_{TH} : Kill the sources $\Rightarrow$ $V_s \to 0V$ (short), $I_b \to 0A$ (open)

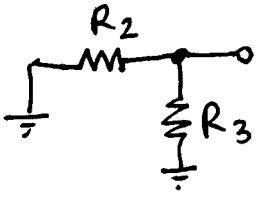

$$\Rightarrow \quad Z_{TH} = R_2 \| R_3 = \frac{R_2 R_3}{R_2+R_3}$$

$$Z_{TH} = \frac{R_2 R_3}{R_2+R_3}$$

$\Rightarrow$

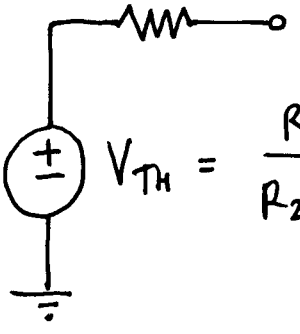

$$V_{TH} = \frac{R_3}{R_2+R_3}(V_s + R_2 I_b)$$

2. [**35 pts**] For the following current-in, voltage-out filter circuit:

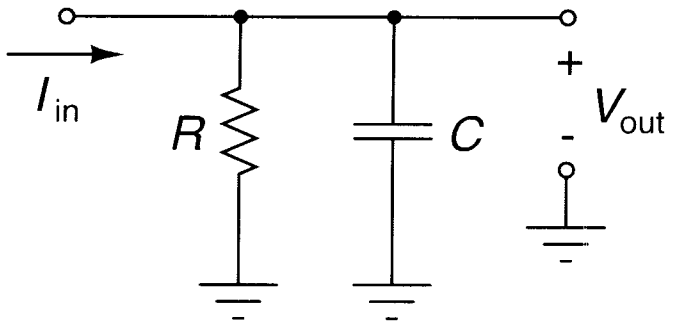

a. Find the input impedance Z_{in}.

$V_{in} = V_{out}$!

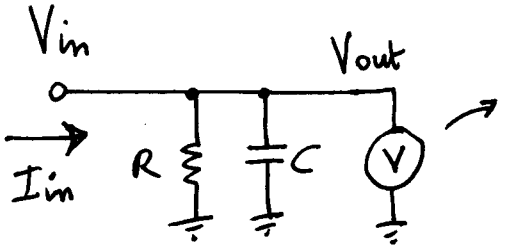

Ideal load at the output is an open circuit (voltmeter, infinite impedance).

$$\Rightarrow \quad Z_{in} = R \parallel \frac{1}{j\omega C} = \frac{R \cdot \frac{1}{j\omega C}}{R + \frac{1}{j\omega C}} = \frac{R}{1 + j\omega RC}$$

$$= \frac{R}{1 + j\omega \tau} \qquad \text{where } \tau = RC$$

(2. continued)

b. Find the output impedance Z_{out}.

Ideal current source I_{in} at the input has ∞ impedance.
(open circuit to "kill" the source)

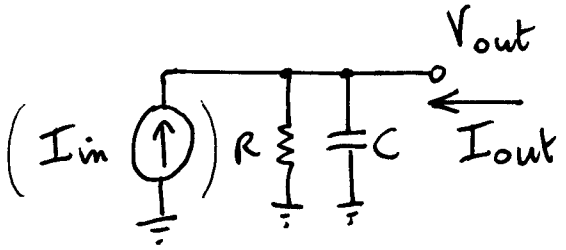

$$\Rightarrow \quad Z_{out} = Z_{in} \; !$$

$$Z_{out} = \frac{R}{1 + j\omega\tau} \quad , \quad \tau = RC$$

c. Find the transfer function $H(j\omega) = \dfrac{V_{out}(j\omega)}{I_{in}(j\omega)}$.

$$V_{in} = V_{out} \Rightarrow H(j\omega) = \frac{V_{out}}{I_{in}} = Z_{in} = Z_{out} \; !$$

$$H(j\omega) = \frac{R}{1 + j\omega\tau} \quad , \quad \tau = RC$$

(2. continued)

d. A variable capacitance C, with adjustable transversal distance x between conductor plates illustrated below, is used to tune the cut-off frequency of the above filter circuit, while the resistance R is kept at 100 kΩ. At a distance x = 10 μm the capacitance C is measured to be 10 nF. Find the radial cut-off frequency of the circuit for x = 1 μm, and for x = 100 μm.

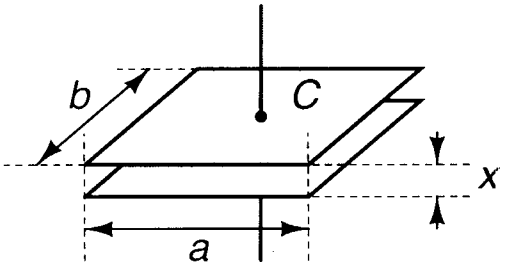

$$C = \varepsilon_0 \varepsilon_r \frac{A}{x} = \varepsilon_0 \varepsilon_r \frac{a \cdot b}{x}$$: inversely proportional to x $\left(\div \frac{1}{x}\right)$

- $x = 10\,\mu m$: $C = 10$ nF
- $x = 1\,\mu m$: $C = 100$ nF

$$\Rightarrow \omega_c = \frac{1}{RC} = \frac{1}{100\,k\Omega \cdot 100\,nF} = 100 \text{ rad/s}$$

- $x = 100\,\mu m$: $C = 1$ nF

$$\Rightarrow \omega_c = \frac{1}{RC} = \frac{1}{100\,k\Omega \cdot 1\,nF} = 10{,}000 \text{ rad/s}$$

(2. continued)

e. Sketch the Bode plots, with magnitude and phase, of the transfer function $H(j\omega)$ for $R = 100\ \text{k}\Omega$ and $x = 100\ \mu\text{m}$. Be sure to label all axes with units.

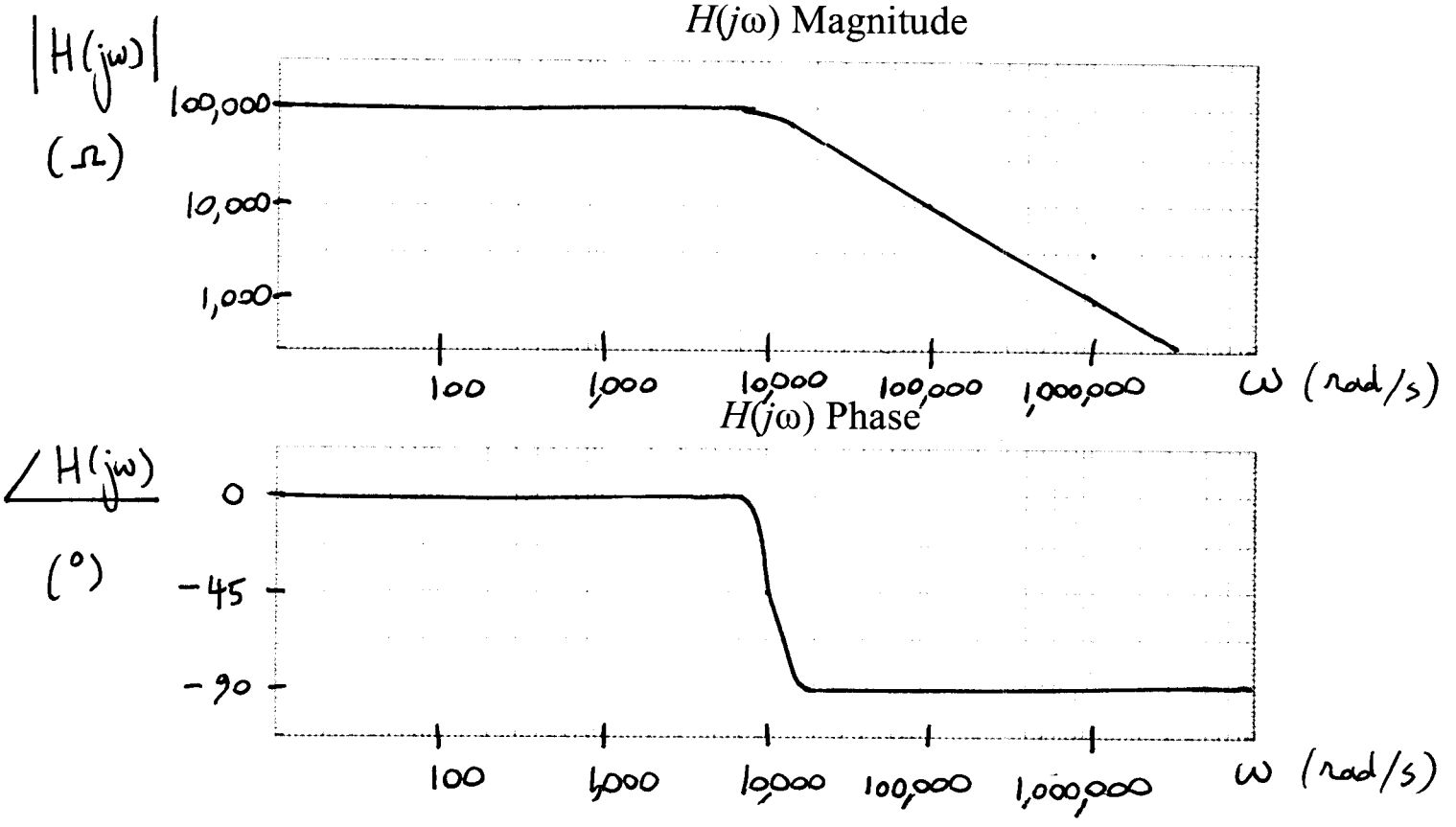

3. [**20 pts**] For the circuit below, calculate the power efficiency η at steady state. The power efficiency is defined as the ratio of power delivered to the load R_{load}, over power delivered by the source V_s.

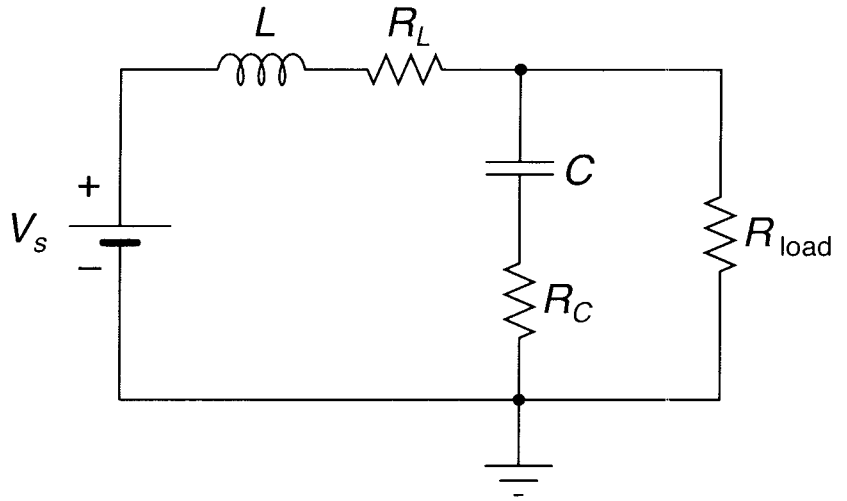

V_s is a DC source $\Rightarrow$ at steady state :

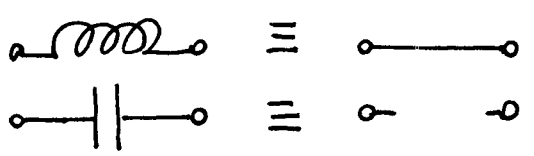

(short circuit)

(open circuit)

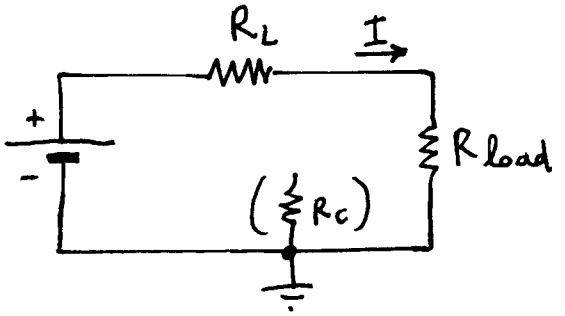

$$I = \frac{V_s}{R_L + R_{\text{load}}}$$

$$\Rightarrow \eta = \frac{P_{\text{load}}}{P_{\text{source}}} = \frac{P_{\text{load}}}{P_{\text{load}} + P_{R_L}} = \frac{R_{\text{load}} \cdot I^2}{R_{\text{load}} I^2 + R_L I^2} = \frac{R_{\text{load}}}{R_{\text{load}} + R_L}$$

4. [**20 pts**] Consider the temperature transducer below, with a constant voltage supply $V_i = 1$ V, two constant resistors each with resistance R, and two thermistors with temperature dependence $R_{Th1} = R\,(1 + k_1\,T)$ and $R_{Th2} = R\,(1 + k_2\,T)$ respectively, where T is the ambient temperature. Find values of the temperature coefficients k_1 and k_2 for which the transducer is linear with constant sensitivity $dV_o\,/\,dT = 0.002$ V/°C.

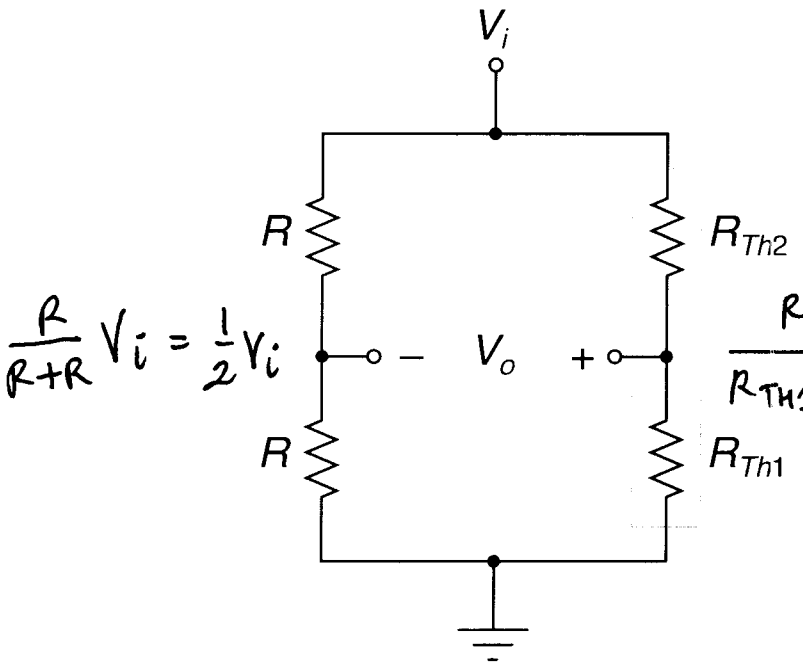

$$\frac{R}{R+R}V_i = \frac{1}{2}V_i \qquad \frac{R_{TH1}}{R_{TH1}+R_{TH2}}V_i = \frac{\cancel{R}(1+k_1T)}{\cancel{R}(1+k_1T+1+k_2T)}$$

$$V_o = \left(\frac{1+k_1T}{2+(k_1+k_2)T} - \frac{1}{2}\right)V_i$$ linear only if $k_1 + k_2 = 0$

$\Rightarrow k_2 = -k_1$

$$\Rightarrow V_o = \left(\frac{1+k_1T}{2} - \frac{1}{2}\right)V_i = \frac{k_1 V_i}{2}T$$

$$\text{Sensitivity} = \frac{dV_o}{dT} = \frac{k_1 V_i}{2} = 0.002\ \text{V/°C}$$

$$\Rightarrow \begin{cases} k_1 = \frac{2}{V_i}\,0.002\ \text{V/°C} = 0.004\ \text{C}^{\circ -1} \\ k_2 = -k_1 = -0.004\ \text{C}^{\circ -1} \end{cases}$$