BENG 186B Winter 2015

Quiz 3

Wednesday, March 4, 2015

Last Name, First Name: SOLUTIONS

- This quiz is closed book and closed notes. You may use a calculator for algebra and arithmetic.
- This quiz has 10 pages, including this cover sheet. Do not attach separate sheets. If you need more space, use the back of the pages.
- Circle or box your final answers and show your work on the pages provided.
- There are 4 problems. Points for each problem are given in **[brackets]**. There are 100 points total.
- You have 50 minutes to complete this quiz.

1. **[35 pts]** ADCs typically cannot measure negative voltages. In order for an ADC to measure the output of an instrumentation amplifier (IA) correctly, you can apply a reference voltage V_{ref} as the "middle ground" for the differential stage of the IA:

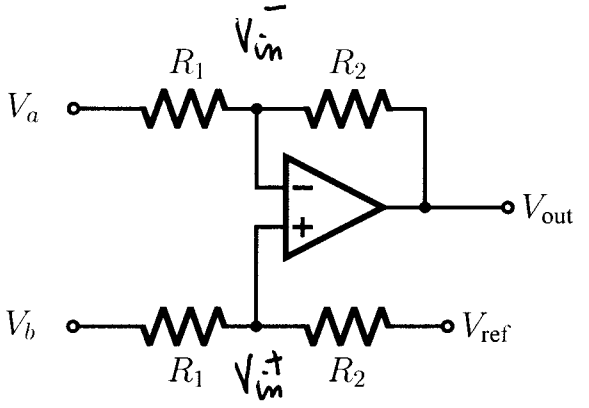

(a) Assume the op–amp is ideal. Derive, **from first principles**, an equation for the output V_{out} in terms of the inputs V_a and V_b, and the reference V_{ref}.

KCL @ V_{in}^-:
$$\frac{V_a - V_{in}^-}{R_1} = \frac{V_{in}^- - V_{out}}{R_2} \qquad (1)$$

KCL @ V_{in}^+:
$$\frac{V_b - V_{in}^+}{R_1} = \frac{V_{in}^+ - V_{ref}}{R_2} \qquad (2)$$

and $V_{in}^- = V_{in}^+$ $\underset{(1)-(2)}{\Longrightarrow}$
$$\frac{V_a - V_b}{R_1} = -\frac{V_{out} - V_{ref}}{R_2}$$

or
$$V_{out} = V_{ref} - \frac{R_2}{R_1} \cdot (V_a - V_b)$$

(b) How does V_{ref} affect the V_{out} expression in part (a)?

It is an additive offset.

(c) What is the differential gain according to part (a)? Does V_{ref} affect it?

$$A_{diff} = \frac{d V_{out}}{d(V_a - V_b)} = -\frac{R_2}{R_1}$$ independent of V_{ref}

(d) Let $R_1 = 10\,\text{k}\Omega$ and $R_2 = 100\,\text{k}\Omega$. Assume the resistors are perfectly matched. What is the amplifier's common–mode rejection ratio (CMRR) in decibels? Ignore any common–mode signals due to V_{ref}.

$$A_{cm} = 0 \Rightarrow CMRR = \infty \quad (\infty\ \text{dB})$$

(e) Now suppose the resistors are not perfectly matched, resulting in a common–mode gain of 0.01. Assume the amplifier's differential gain is unchanged. What is the CMRR in decibels in this case? Again, ignore any common–mode signals due to V_{ref}.

$$CMRR = \frac{|A_{diff}|}{|A_{cm}|} = \frac{\frac{R_2}{R_1}}{0.01} = \frac{10}{0.01} = 1{,}000$$

$$= 60\ \text{dB}$$

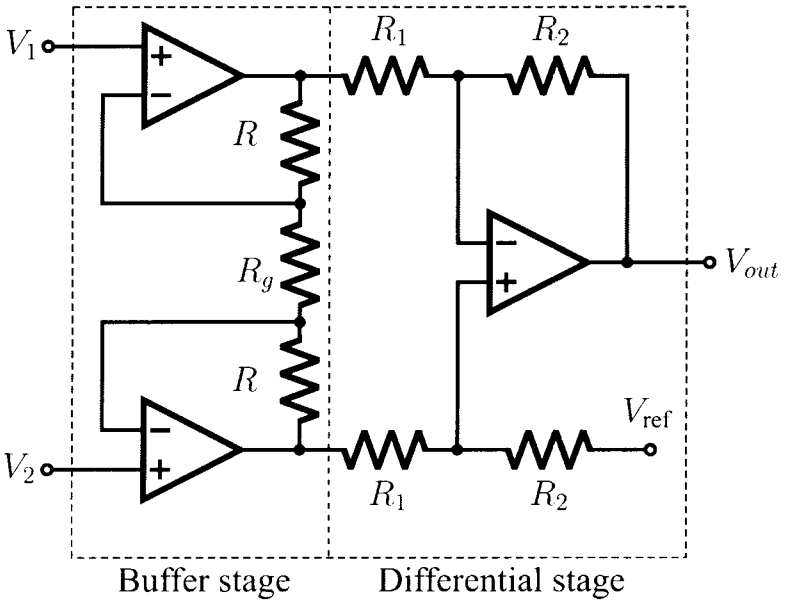

(f) Instrumentation amplifiers include a buffer stage inserted in front of the differential stage (shown above). What two purposes does this buffer stage serve? *Hint:* What's special about its inputs and its gain?

1) Provide infinite input impedance

2) Increase the overall CMRR

(by providing extra differential gain $(1+\frac{2R}{R_g})$ for the same common-mode gain)

2. **[20 pts]** A Clark probe can be used to measure O_2 concentration. It has the following transfer function:

$$y = 4F\phi \times [O_2]$$

where y is the electrode output, $F = 9.65 \times 10^4$ C/mol is the Faraday constant, ϕ is the sample flow rate, and $[O_2]$ is the oxygen concentration.

(a) What unit is y expressed in? Show that this unit is consistent with the other variables in the transfer function. What physical quantity does y represent?

y is the electrical current sustaining the oxidation reaction.

Units: $\frac{C}{mol} \cdot \frac{L}{s} \cdot \frac{mol}{L} = \frac{C}{s} = A$

(b) Let $\phi = 1$ L/min. What is the sensitivity of the electrode with respect to oxygen concentration? What unit is this sensitivity expressed in?

Sensitivity: $\frac{dy}{d[O_2]} = 4F\phi = 4 \cdot 9.65\,10^4 \frac{C}{mol} \cdot \frac{1}{60} \frac{L}{s}$

$= 0.66\,10^4 \frac{CL}{mol\,s} = 6.6\,10^3\ A/(mol/L)$

Units: $\frac{A}{mol/L}$ $\left(= \frac{A \cdot L}{mol} \right)$

(c) The Clark probe contains a silver/silver–chloride electrode that undergoes oxidation:

$$4\,Ag + 4\,Cl^- \rightleftharpoons 4\,AgCl + 4\,e^-$$

Suppose the Clark probe initially contains 1 mol Ag. If a sample with oxygen concentration of 5 mmol/L flowed through the probe at 1 L/min, how long will the Clark probe last?

$$O_2 + 2H_2O + 4e^- \rightleftharpoons 4(OH^-)$$

and $$4Ag + 4Cl^- \rightleftharpoons 4AgCl + 4e^-$$

$\Rightarrow$ 4 Ag consumed for every O_2 consumed

$\Rightarrow$ Ag is consumed at a rate:

$$4 \cdot 5\ \text{mmol/L} \cdot 1\ \text{L/min} = 20\ \text{mmol/min}$$

$\Rightarrow$ The entire 1 mol of Ag will be consumed after:

$$\frac{1\ \text{mol}}{20\ \text{mmol/min}} = \frac{1000}{20}\ \text{min} = \underline{50\ \text{minutes}}$$

3. **[20 pts]** Consider Einthoven's triangle shown below. The triangle is equilateral and the augmented lead vectors (aVR, aVL, and aVF) bisect the bipolar lead vectors (I, II, and III).

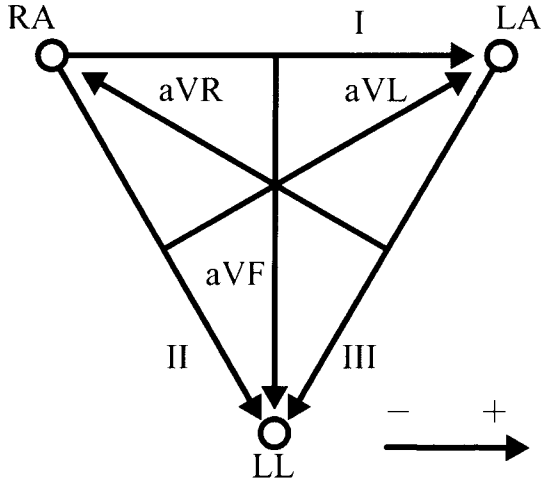

(a) Show how you can obtain the following leads in terms of the limb electrode potentials LA, RA, and LL.

i. lead I: LA − RA

ii. lead II: LL − RA

iii. lead III: LL − LA

iv. lead aVR: RA − $\frac{1}{2}$(LL + LA)

v. lead aVL: LA − $\frac{1}{2}$(RA + LL)

vi. lead aVF: LL − $\frac{1}{2}$(RA + LA)

(b) Your 12–lead ECG machine is broken and can only measure leads I and III. Show how you can obtain the other four leads given only leads I and III.

i. lead II:

$$\mathrm{II} = \mathrm{I} + \mathrm{III}$$

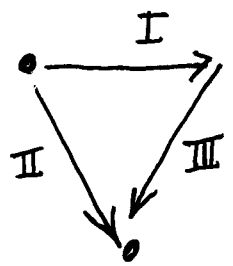

ii. lead aVR:

$$\mathrm{aVR} = -\frac{\mathrm{III}}{2} - \mathrm{I}$$

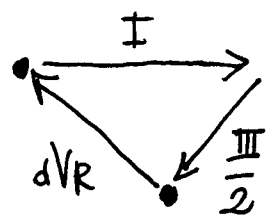

iii. lead aVL:

$$\mathrm{aVL} = \frac{1}{2}(\mathrm{I} - \mathrm{III})$$

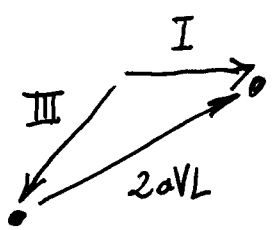

iv. lead aVF:

$$\mathrm{aVF} = \frac{1}{2}\mathrm{I} + \mathrm{III}$$

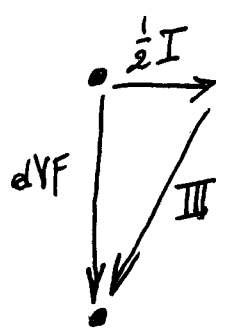

4. **[25 pts]** Circle the **best answer (only one answer per question)**:

(a) [4 pts] Fluid dynamics can be modeled with electrical circuit components where:

i. Fluid resistance is modeled by resistance
ii. Fluid inertia is modeled by capacitance
iii. Fluid volume is modeled by voltage
iv. Fluid flow is modeled by charge
v. All of the above

(b) [4 pts] Tonometry indirectly measures blood pressure by applying pressure to flatten the blood vessel. Factors that affect this include:

i. The angle at which the transducer is placed on the blood vessel
ii. The depth of where the blood vessels are located
iii. The position of the transducer
iv. The size of the blood vessel in relation to the transducer
v. All of the above

(c) [4 pts] If a sound source approaches an observer, the observer will hear:

i. A lower pitch sound if the observer runs at the same speed and direction as the source
ii. A slower sound if the observer runs at the same speed and direction as the source
iii. A faster sound if the observer is running towards the source
iv. The same sound if the observer remains stationary
v. All of the above

(d) [4 pts] When designing a pH probe, one should keep in mind:

i. The negative reference electrode needs to be different from the positive electrode
ii. One of the electrodes needs to sit in a saturated acidic solution with a known concentration
iii. The basic buffer solution needs to be completely separated from the sample
iv. The sample needs to continuously flow through the probe
v. All of the above

(e) [9 pts] Indicate for each statement below whether it is true or false:

i. **TRUE / FALSE**: The driven right leg system increases the body's effective grounding resistance.

ii. **TRUE / FALSE**: The presence of bubbles increases a fluid's compliance C which reduces the natural frequency of the fluid system.

iii. **TRUE / FALSE**: While using a sphygmomanometer to measure blood pressure, blood turbulence give rise to the Korotkoff sounds.

iv. **TRUE / FALSE**: Indicator-dilutions methods provide an average of cardiac output by observing the rate of change in the concentration of the indicator over time as it passes through the blood stream.

v. **TRUE / FALSE**: Although highly invasive, an electromagnetic flowmeter can measure instantaneous blood velocity.

vi. **TRUE / FALSE**: Flowmeters based on the Doppler effect do not require the presence of particles (such as blood cells) in the fluid for accurate measurement.

vii. **TRUE / FALSE**: The electrodes used to measure oxygen are polarized to a potential of 0.7 V in order to establish a linear relationship between current and oxygen concentration.

viii. **TRUE / FALSE**: The "resistive T" used in potentiostats help create extremely small effective resistances from higher physical resistances.

ix. **TRUE / FALSE**: One purpose a potentiostat serves is to amplify the small voltages produced by electrodes.