BENG 186B Winter 2018

Quiz 1

Friday, January 26, 2018

***Name** (Last, First):* SOLUTIONS

- This quiz is closed book and closed notes. You may use a calculator for algebra and arithmetic.
- Do not attach separate sheets. If you need more space, use the back of the pages.
- Circle or box your final answers and show your work on the pages provided.
- There are 4 problems. Points for each problem are given in **[brackets]**. There are 100 points total.
- You have 50 minutes to complete this quiz.

1. **[10 pts]** Circle the **best answer (only one answer per question)**:

(a) [2.5 pts] Indirect physiological measurements are typically:

i. higher bandwidth.
ii. more accurate.
iii. more expensive.
iv. less invasive.

(b) [2.5 pts] The transfer function of a critically damped second-order low-pass filter has:

i. two complex conjugate poles.
ii. two identical real poles.
iii. one real zero and one real pole.
iv. one real zero and one imaginary pole.

(c) [2.5 pts] The gauge factor of a strain gauge is independent of:

i. piezo-resistive effect.
ii. Poisson's ratio.
iii. Young's modulus.
iv. temperature.

(d) [2.5 pts] A linear variable differential transformer is a type of inductive sensor that offers:

i. zero offset.
ii. greater linearity.
iii. greater noise suppression.
iv. all of the above.

2. **[25 pts]** Derive the Thévenin equivalent at node V in the circuit below:

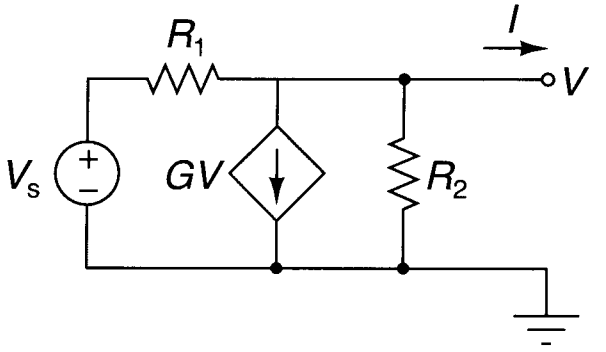

(a) [10 pts] Find the Thévenin equivalent open-circuit voltage V_{oc}.

The voltage-dependent current source GV, with voltage V across it, is equivalent to a resistance $1/G$:

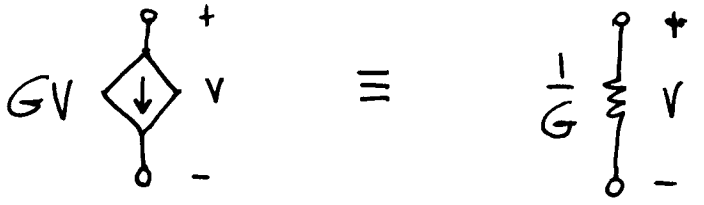

$\Rightarrow$

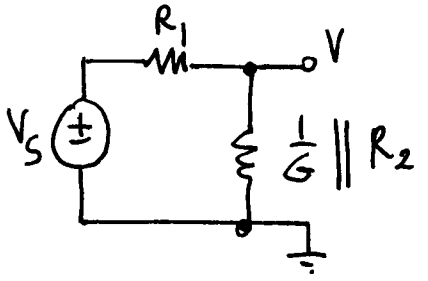

$$= \frac{\frac{1}{G} \cdot R_2}{\frac{1}{G} + R_2} = \frac{R_2}{1 + R_2 G}$$

$$V_{oc} = \frac{\frac{R_2}{1+R_2G}}{\frac{R_2}{1+R_2G} + R_1} V_s = \frac{R_2}{R_2 + R_1(1+R_2G)} V_s = \frac{R_2}{R_1 + R_2 + R_1 R_2 G} V_s$$

(b) [10 pts] Find the Thévenin equivalent impedance Z_{th}.

Kill the <u>independent</u> source V_s :

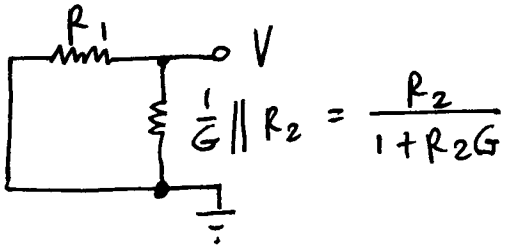

$$Z_{th} = R_1 \,\Big\|\, \frac{R_2}{1+R_2G}$$

$$= \frac{R_1 \cdot \frac{R_2}{1+R_2G}}{R_1 + \frac{R_2}{1+R_2G}} = \frac{R_1 R_2}{R_1(1+R_2G) + R_2}$$

$$= \frac{R_1 R_2}{R_1 + R_2 + R_1R_2G}$$

(c) [5 pts] Draw the Thévenin equivalent diagram.

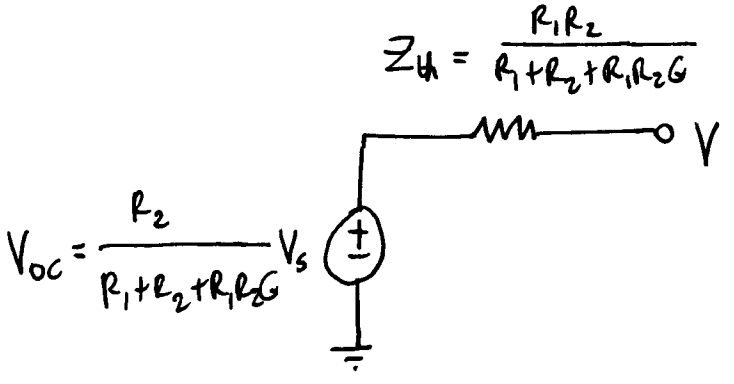

3. **[35 pts]** Consider the voltage-input, current-output filter circuit below.

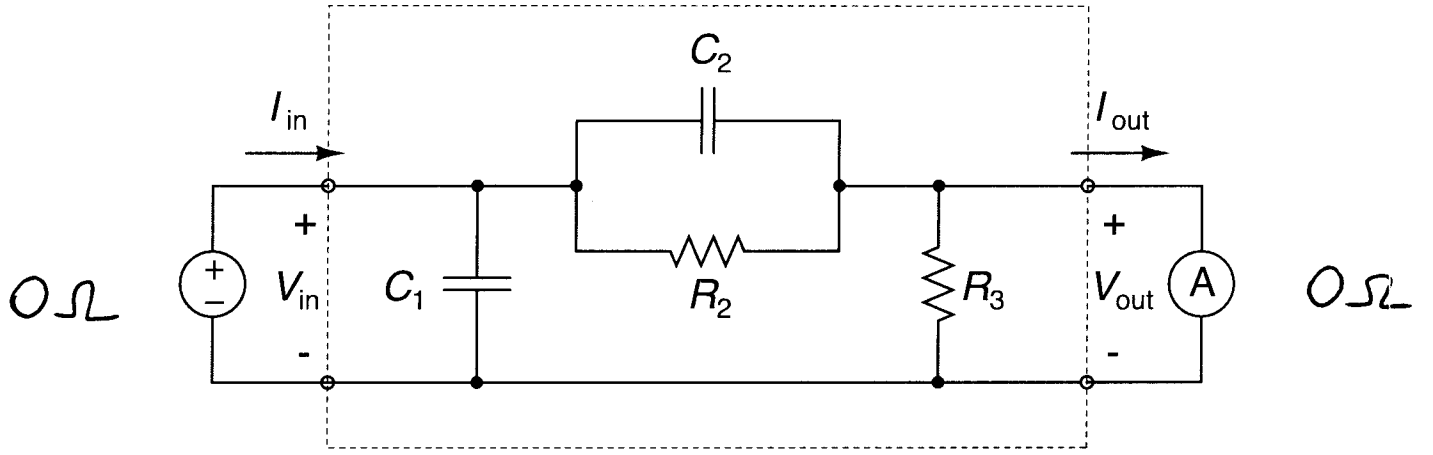

(a) [10 pts] Find the input impedance $Z_{in}(j\omega)$.

Ideal load @ output = $0\,\Omega$ (SHORT).

$\Rightarrow$

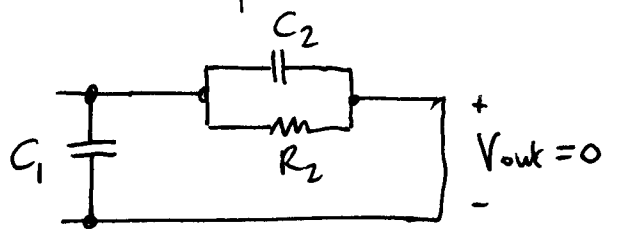

$$Z_{in}(j\omega) = \frac{1}{j\omega C_1} \,\Big\|\, \frac{1}{j\omega C_2} \,\Big\|\, R_2$$

$$= \frac{1}{j\omega C_1 + j\omega C_2 + \frac{1}{R_2}}$$

$$= \frac{R_2}{1 + j\omega R_2 (C_1 + C_2)}$$

(b) [10 pts] Find the output impedance $Z_{out}(j\omega)$.

Kill the ideal voltage source @ input $\Rightarrow V_{in} = 0$

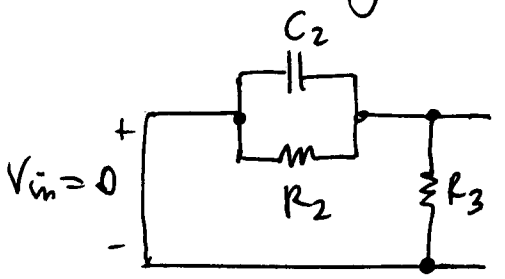

$$Z_{out}(j\omega) = \frac{1}{j\omega C_2} \parallel R_2 \parallel R_3$$

$$= \frac{1}{j\omega C_2 + \frac{1}{R_2} + \frac{1}{R_3}}$$

$$= \frac{R_2 \cdot R_3}{j\omega R_2 R_3 C_2 + R_2 + R_3}$$

$$= \frac{\frac{R_2 R_3}{R_2 + R_3}}{1 + j\omega \frac{R_2 R_3}{R_2 + R_3} C_2}$$

(c) [5 pts] Find the transfer function $H(j\omega) = I_{out}(j\omega) \,/\, V_{in}(j\omega)$.

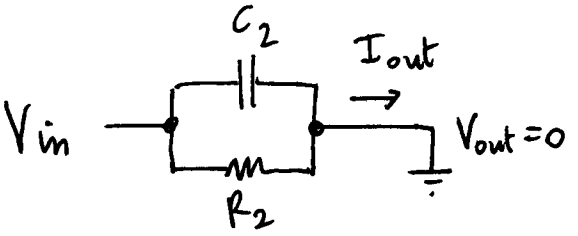

$$I_{out} = j\omega C_2 V_{in} + \frac{V_{in}}{R_2}$$

$$H(j\omega) = j\omega C_2 + \frac{1}{R_2}$$

(d) [10 pts] Sketch the Bode plot of the transfer function $H(j\omega)$ for $C_1 = 100$ nF, $C_2 = 10\ \mu$F, $R_2 = 1$ kΩ, and $R_3 = 100$ kΩ. Be sure to label the axes and indicate the units (rad/s, dBΩ^{-1}, and degrees).

- No poles
- Single zero at $-\frac{1}{R_2 C_2} = -100 \frac{\text{rad}}{\text{s}}$
- $|H(j\omega)| \rightarrow \frac{1}{R_2} = 10^{-3} \frac{1}{\Omega}$ for $\omega \rightarrow 0$

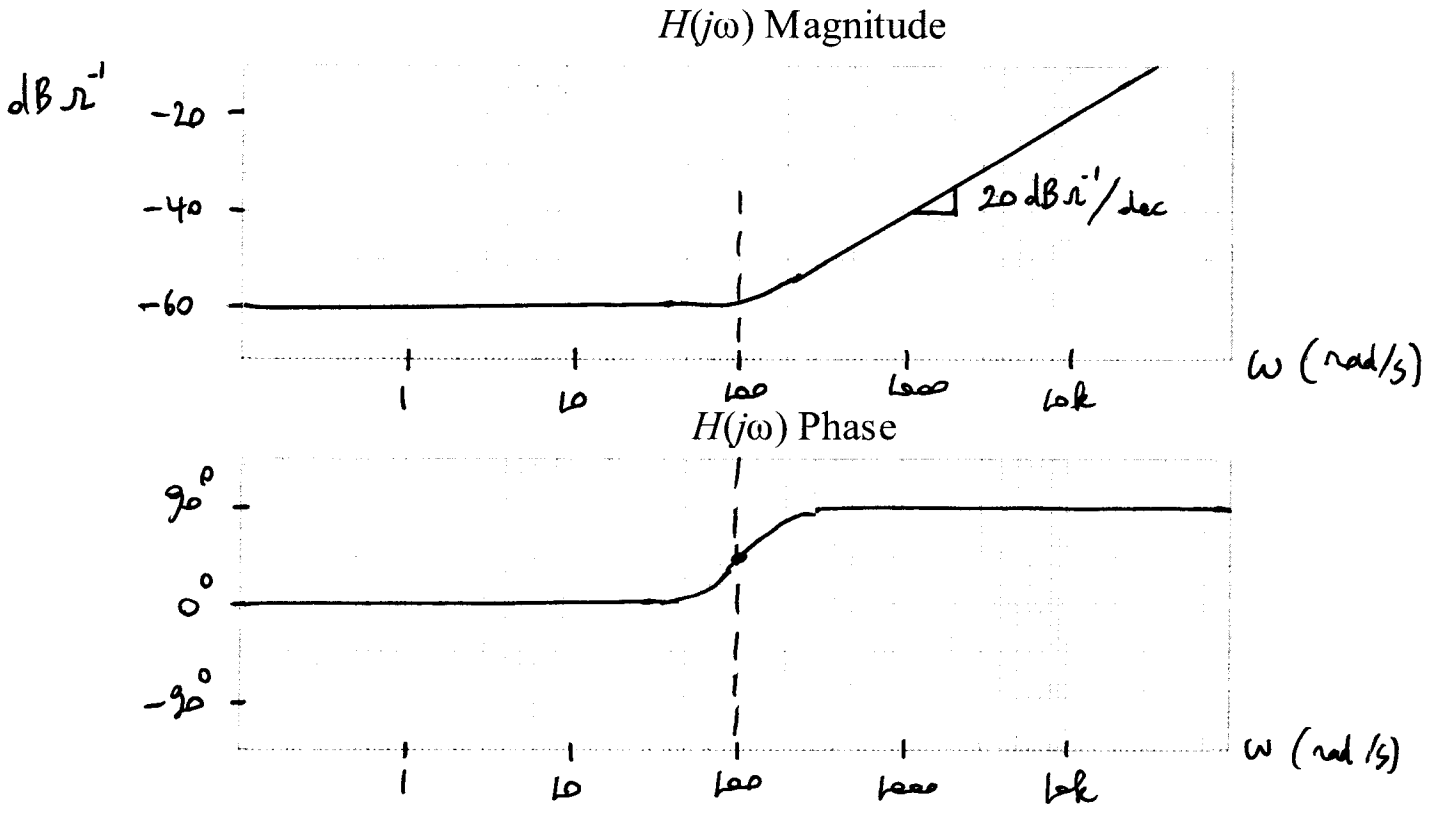

4. **[30 pts]** Consider the stress transducer below, with constant supply voltage $V_i = 3$ V, two constant resistors each with resistance $R = 100$ kΩ, and two strain gauges R_{G1} and R_{G2} with identical nominal resistance R_{nom} and gauge factor $G = -100$ that are differentially activated by complementary strain due to complementary stress σ and $-\sigma$ as shown. Both strain gauges have the same Young's modulus $E = 100$ kPa.

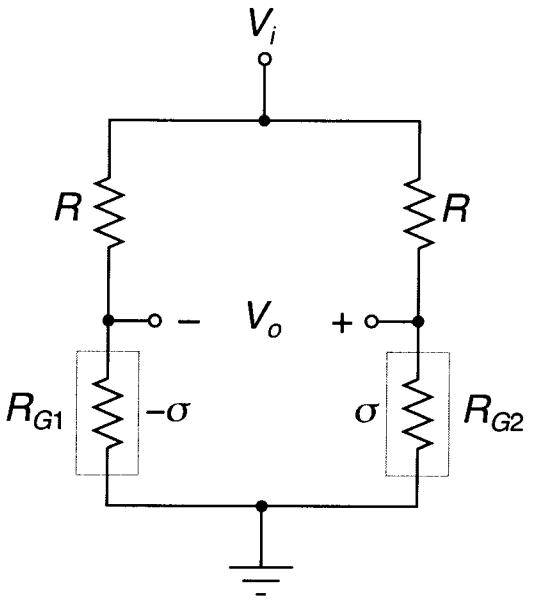

$$
\begin{aligned}
R_{G1} &= R_{nom}\,(1 - G\epsilon) &= R_{nom}\left(1 - \frac{G}{E}\sigma\right) \\
R_{G2} &= R_{nom}\,(1 + G\epsilon) &= R_{nom}\left(1 + \frac{G}{E}\sigma\right) \\
\sigma &= E\,\epsilon
\end{aligned}
$$

(a) [10 pts] Find the output voltage V_o as a function of stress σ.

$$V_o = \left(\frac{R_{G_2}}{R_{G_2} + R} - \frac{R_{G_1}}{R_{G_1} + R}\right) V_i$$

$$= \left(\frac{R_{nom}\left(1 + \frac{G}{E}\sigma\right)}{R_{nom}\left(1 + \frac{G}{E}\sigma\right) + R} - \frac{R_{nom}\left(1 - \frac{G}{E}\sigma\right)}{R_{nom}\left(1 - \frac{G}{E}\varepsilon\right) + R}\right) V_i$$

(b) [10 pts] Find the value of R_{nom} that maximimizes the sensitivity of the stress transducer, for low levels of stress $\sigma \approx 0$.

Sensitivity for the Wheatstone bridge is maximum for $R_{nom} = R = 100\,k\Omega$

Sensitivity: $2 \cdot \frac{1}{4} \frac{G}{E} V_i$

$$= \frac{1}{2} \frac{G}{E} V_i$$

$$= -\frac{1}{2} \frac{100}{100\,kPa} \cdot 3V = -1.5 \frac{V}{kPa}$$

(c) [10 pts] A 10-bit analog-to-digital converter (ADC) is used to digitize the voltage output V_o for a digital reading of stress σ. The full-scale voltage range of the ADC is from 1 V to 2 V. Find the accuracy of the stress reading for low levels of stress $\sigma \approx 0$.

Voltage resolution : $1\ \text{LSB} = \dfrac{1\ \text{V}}{1{,}024} = 1\ \text{mV}$

Stress resolution : $1\ \text{LSB} = \dfrac{1\ \text{mV}}{1.5\ \text{V/kPa}} = 0.66\ \text{Pa}$

Worst-case accuracy : $\frac{1}{2}\ \text{LSB} = 0.33\ \text{Pa}$