BENG 186B Winter 2018

Quiz 2

Friday, February 16, 2018

Last Name, First Name: SOLUTIONS

- This quiz is closed book and closed notes. You may use a calculator for algebra and arithmetic.
- This quiz has 9 pages, including this cover sheet. Do not attach separate sheets. If you need more space, use the back of the pages.
- Circle or box your final answers and show your work on the pages provided.
- There are 4 problems. Points for each problem are given in **[brackets]**. There are 100 points total.
- You have 50 minutes to complete this quiz.

1. **[30 pts]** Consider the active filter circuit below:

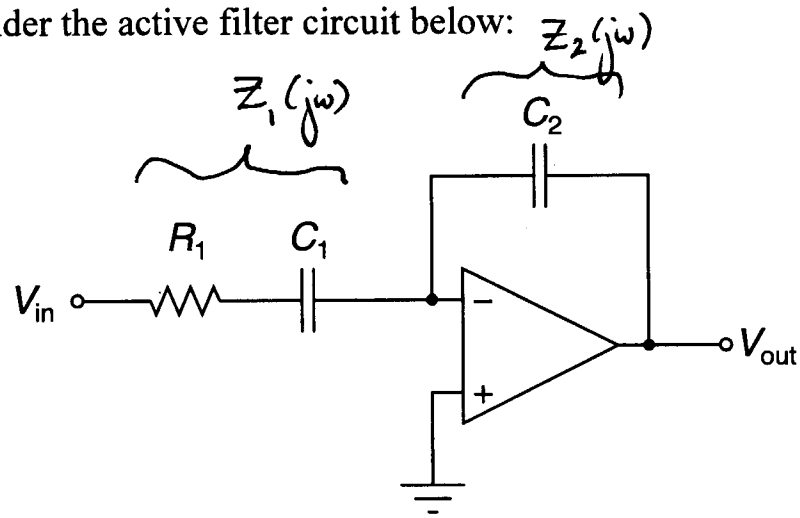

(a) [15 pts] Assume the operational amplifier is ideal and unsaturated. Derive the transfer function $H(j\omega) = V_{out}(j\omega) \,/\, V_{in}(j\omega)$. What type of filter characteristic is this? What is the cutoff frequency?

$$H(j\omega) = -\frac{Z_2(j\omega)}{Z_1(j\omega)} = -\frac{\frac{1}{j\omega C_2}}{R_1 + \frac{1}{j\omega C_1}} = -\frac{C_1}{C_2} \cdot \frac{1}{1 + j\omega R_1 C_1}$$

LOWPASS filter with cutoff $\omega_c = \frac{1}{R_1 C_1}$

$$\left(f_c = \frac{1}{2\pi R_1 C_1} \right)$$

(b) [10 pts] What is the input impedance at the V_{in} node?

Virtual ground on the inverting input of the opamp

$$\Rightarrow Z_{in}(j\omega) = Z_1(j\omega) = R_1 + \frac{1}{j\omega C_1}$$

(c) [5 pts] What is the output impedance at the V_{out} node?

V_{out} depends on V_{in} only (not on I_{out})

$$\Rightarrow Z_{out} = 0$$

2. **[25 pts]** Consider the circuit below with 555 and LM311 components assumed ideal. The values for the passive components are $R_1 = 1.14\,\text{M}\Omega$, $R_2 = 143\,\text{k}\Omega$, $R_3 = R_4 = R_5 = 100\,\text{k}\Omega$, $R_6 = 400\,\text{k}\Omega$, and $C = 1\,\mu\text{F}$. You may also find these equations useful for the 555 timer ($\ln(3) \approx 1.1$ and $\ln(2) \approx 0.7$):

$$T = \ln(3) \times RC \qquad T_{lo} = \ln(2) \times R_2C \qquad T_{hi} = \ln(2) \times (R_1 + R_2)C$$

Sketch the waveforms for the voltages V_A, V_B and V_{out} on the diagrams on the next page. Ignore any initial transients, and assume that the circuit has been running forever such that the origin $t = 0$ on the time axis is arbitrary. Show your work below.

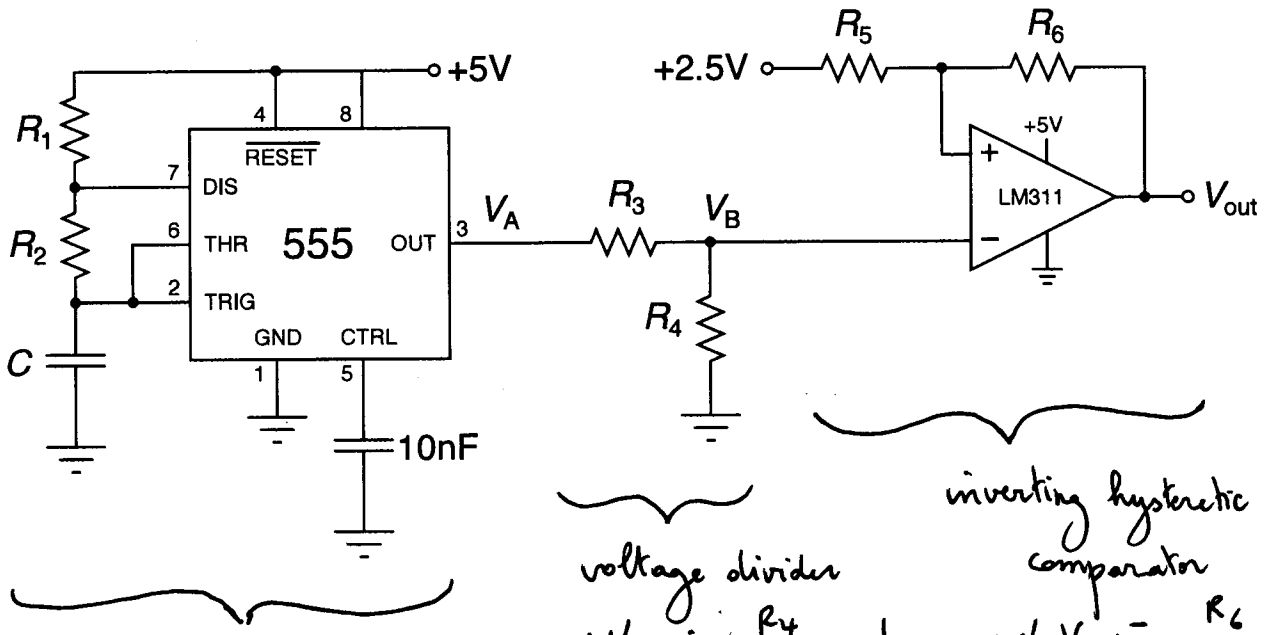

555 astable oscillator

w/ $T_{lo} = 0.7 \times 143\,\text{k}\Omega \times 1\,\mu\text{F}$
$= 100$ ms

$T_{hi} = 0.7 \times (1.14 + 0.143)\,\text{M}\Omega \times 1\,\mu\text{F}$
$= 900$ ms

voltage divider
w/ gain $\frac{R_4}{R_3+R_4} = \frac{1}{2}$

inverting hysteretic comparator
w/ $V_{ref}^- = \frac{R_6}{R_5+R_6} 2.5\text{V}$
$= 2\text{V}$

$V_{ref}^+ = 3\text{V}$
by symmetry

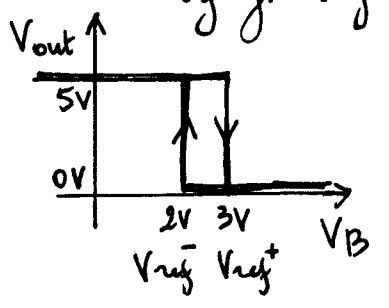

⇒ • V_A is a square wave with period 1 s and 0.9 s pulse width and 5V pulse height.

• V_B is the same square wave but with 2.5 V pulse height.

• V_{out} (eventually) remains at 5V
(due to the hysteresis, since $V_B < V_{ref}^+ = 3V$ always)

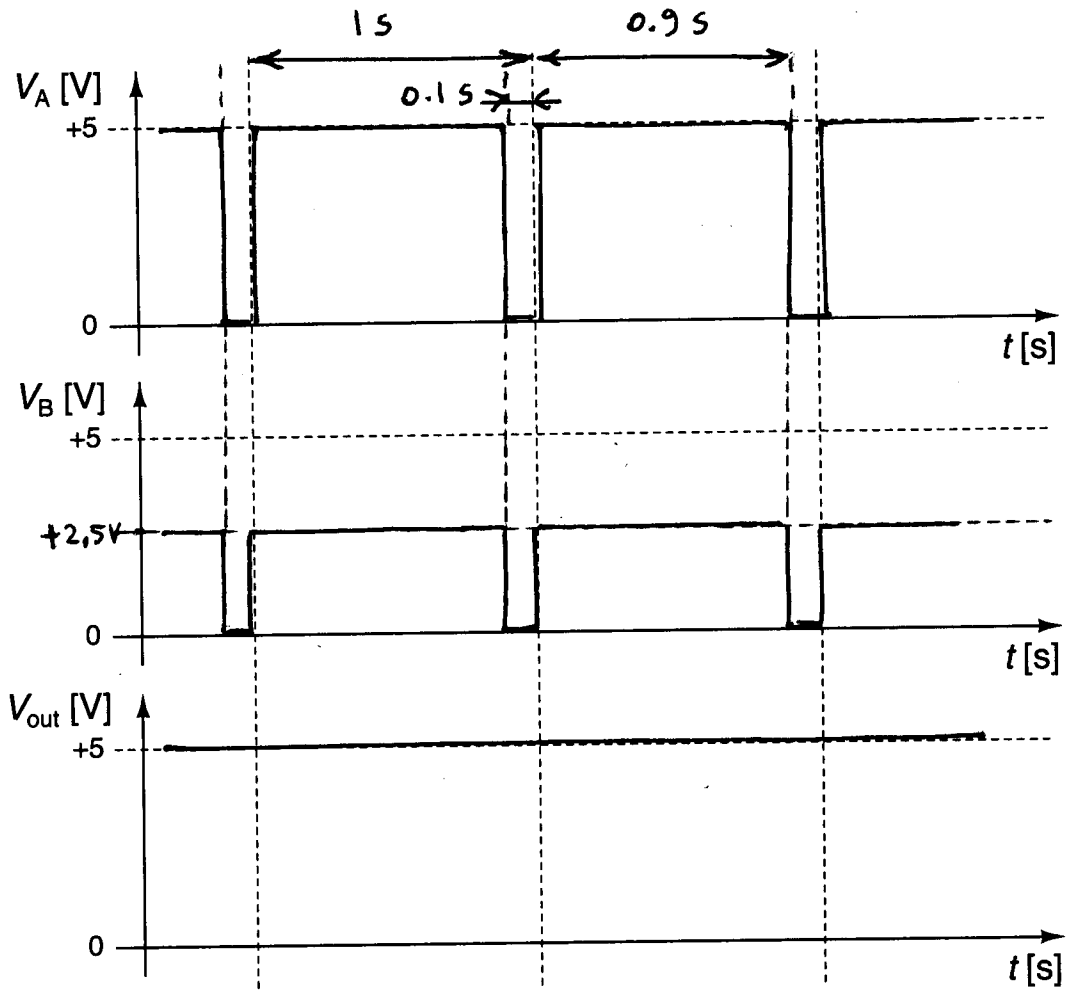

3. **[20 pts]** Circle the **best answer (only one answer per question)**:

(a) [4 pts] Find the simplest logical expression for the output of the circuit shown at right:

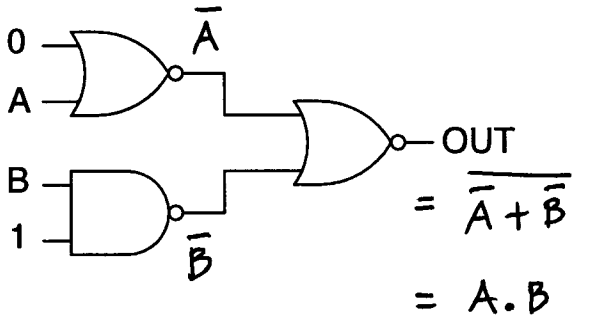

i. XOR(A, B)

ii. OR(A, B)

iii. AND(A, B)

iv. 0

v. 1

(b) [4 pts] A hysteretic comparator has:

i. no feedback.

ii. positive feedback.

iii. negative feedback.

iv. an output strictly between the V^- and V^+ supply rails.

v. an output that stays put at its initial value.

(c) [4 pts] The impedance of the electrode shown on the right at very high frequency is:

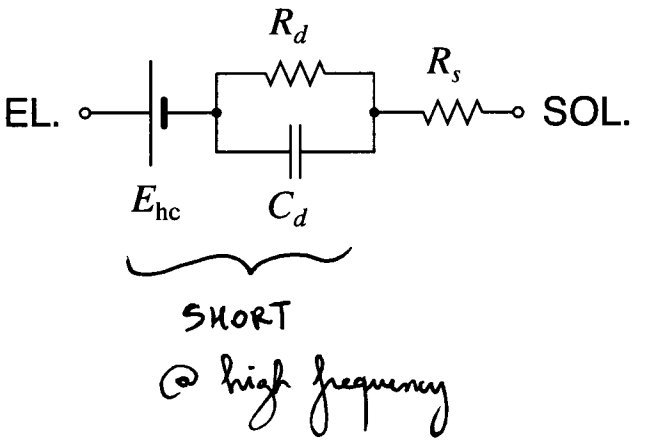

i. $1 / j\omega C_d + R_s$

ii. $R_d + R_s$

iii. R_d

iv. R_s

v. E_{hc}

(d) [1 pt ea.] Indicate for each statement below whether it is true or false:

i. **TRUE** / **FALSE**: The Nernst potential for calcium is positive when the extracellular calcium concentration is higher than the intracellular calcium concentration.

ii. **TRUE** / **FALSE**: EOG measures the rotation of the eyeball.

iii. **TRUE** / **FALSE**: ENG has larger amplitude than EMG.

iv. **TRUE** / **FALSE**: ECoG stands for electrocortisonegraphy and is clinically used to noninvasively provide a measure of stress.

v. **TRUE** / **FALSE**: The potential measured from a current dipole is zero in the bisecting plane perpendicular to the dipole.

vi. **TRUE** / **FALSE**: The P wave of ECG indicates atrial repolarization.

vii. **TRUE** / **FALSE**: The resting potential of an excitable cell is set by currents resulting from imbalances in ion concentrations on both sides of the cell membrane.

viii. **TRUE** / **FALSE**: Polarizable electrodes have high activation overpotential.

4. **[25 pts]** Consider an electrochemical cell at room temperature, with two compartments of ionic solutions each containing KCl and NaCl with concentrations given in the table below. The two compartments are separated by a membrane that is equally permeable to all ion types, K^+, Na^+ and Cl^-. Two identical Ag/AgCl electrodes are inserted, one in each compartment. The GHK equation at room temperature is:

$$V_m = 60\,\text{mV} \times \log\left(\frac{P_{\text{Na}}[\text{Na}^+]_o + P_{\text{K}}[\text{K}^+]_o + P_{\text{Cl}}[\text{Cl}^-]_i}{P_{\text{Na}}[\text{Na}^+]_i + P_{\text{K}}[\text{K}^+]_i + P_{\text{Cl}}[\text{Cl}^-]_o}\right)$$

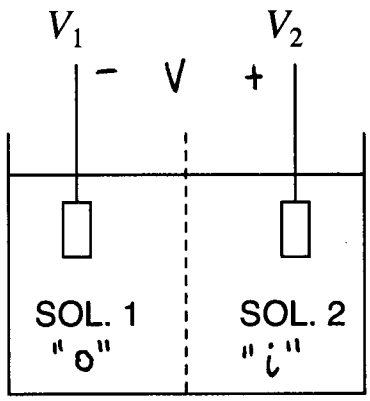

	SOL. 1	SOL. 2
KCl	1000 mmol/L	10 mmol/L
NaCl	90 mmol/L	10 mmol/L

(a) [15 pts] Find the voltage $V_2 - V_1$ between the electrodes measured by a voltmeter with infinite input impedance.

Identical electrodes $\Rightarrow$ half-cell potentials cancel in $V_2 - V_1$.

$$V_2 - V_1 = 60\,\text{mV} \log \frac{\cancel{P}[Na^+]_1 + \cancel{P}[K^+]_1 + \cancel{P}[Cl^-]_2}{\cancel{P}[Na^+]_2 + \cancel{P}[K^+]_2 + \cancel{P}[Cl^-]_1}$$

$$= 60\,\text{mV} \log \frac{[NaCl]_1 + [KCl]_1 + ([NaCl]_2 + [KCl]_2)}{[NaCl]_2 + [KCl]_2 + ([NaCl]_1 + [KCl]_1)}$$

$$= 60\,\text{mV} \log \frac{1}{1} = 0$$

(b) [10 pts] The two electrodes each have 0.1 mmol of AgCl deposited on the surface of their Ag core, when they are brand new. For how much total time can you drive a current of 100 mA through the electrochemical cell before the electrodes malfunction? Does the polarity of this current matter? Faraday's constant F is approximately 100,000 C/mol.

Either electrode malfunctions when the AgCl layer becomes completely depleted, i.e., 0.1 mmol of AgCl dissociates.

$$T_{total} = \frac{F \cdot 0.1\ \text{mmol}}{I} = \frac{100\ \frac{C}{\cancel{\text{mmol}}} \cdot 0.1\ \cancel{\text{mmol}}}{0.1\ \frac{C}{s}}$$

$$= 100\ s$$

Same for both polarities of the current (each for one of the two electrodes malfunctioning)