BENG 186B Winter 2018

Quiz 3

Friday, March 9, 2018

Last Name, First Name: SOLUTIONS

- This quiz is closed book and closed notes. You may use a calculator for algebra and arithmetic.
- This quiz has 10 pages, including this cover sheet. Do not attach separate sheets. If you need more space, use the back of the pages.
- Circle or box your final answers and show your work on the pages provided.
- There are 4 problems. Points for each problem are given in **[brackets]**. There are 100 points total.
- You have 50 minutes to complete this quiz.

1. **[20 pts]** Consider Einthoven's triangle of the frontral electrocardiogram (ECG) for the three electrodes RA, LA and LL shown below. The triangle is equilateral and the augmented lead vectors (aVR, aVL, and aVF) bisect the bipolar lead vectors (I, II, and III).

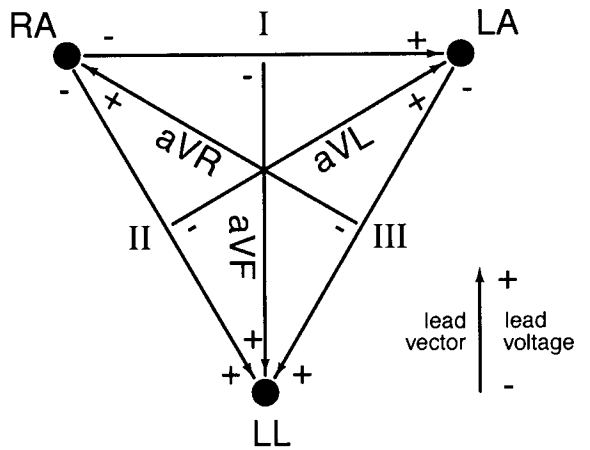

(a) [10 pts] Two instrumentation amplifiers (IA) are connected to the three electrodes as follows: The first IA receives LA on its non-inverting input and RA on its inverting input, and produces V_1 at its output. The second IA receives LA on its non-inverting input and LL on its inverting input, and produces V_2 at its output. Reconstruct the 6 leads of the frontal ECG from these two voltage measurements V_1 and V_2:

I = $LA - RA = V_1$

II = $LL - RA = I + III = V_1 - V_2$

III = $LL - LA = -V_2$

aVR = $-\frac{1}{2}(I + II) = -V_1 + \frac{V_2}{2}$

aVL = $\frac{1}{2}(I - III) = \frac{V_1}{2} + \frac{V_2}{2}$

aVF = $\frac{1}{2}(II + III) = \frac{V_1}{2} - V_2$

(b) [10 pts] From the measurements of the frontal ECG on a normal subject shown below, estimate the direction and magnitude of the cardiac vector at the P wave, at the R wave, and at the T wave. You may assume the distance between shoulders of the subject is roughly 50 cm. *Hint*: it is more accurate visually to discern the most perpendicular lead rather than the most parallel lead.

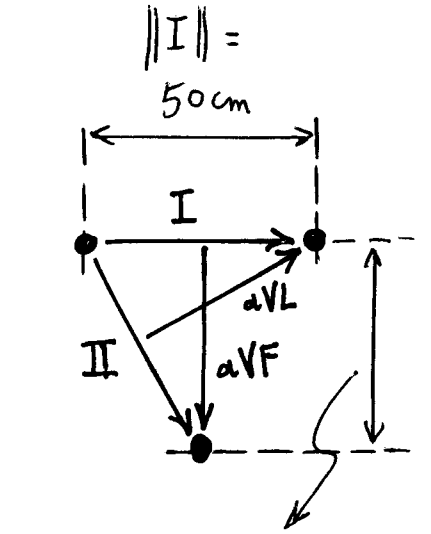

$\|aVF\| = 50\text{ cm} \cdot \cos(30^\circ)$

$= 50\text{ cm} \cdot \frac{\sqrt{3}}{2} = 43\text{ cm}$

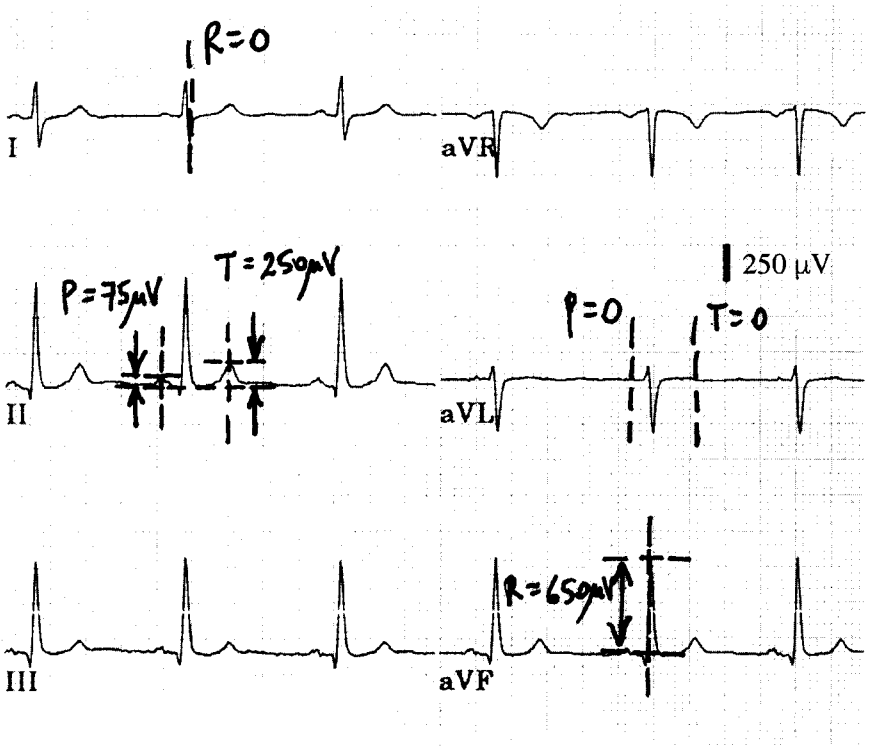

P = 0 @ aVL ⇒ P aligns with II :

magnitude 75μV / 50 cm = 1.5 μV/cm

R = 0 @ I ⇒ R aligns with aVF :

magnitude 650μV / 43 cm = 15 μV/cm

T = 0 @ aVL ⇒ T aligns with II :

magnitude 250μV / 50 cm = 5 μV/cm

2. **[35 pts]** An instrumentation amplifier (IA) with driven right leg (DRL) amplifier is connected to the body as shown below to record a single-lead electrocardiogram. The electrode-skin interface resistances are $R_{LA} = 100$ kΩ, $R_{LL} = 90$ kΩ, and $R_{RL} = 110$ kΩ. Each opamp has input impedance $R_{in} = 10$ GΩ to ground. The IA resistances are $R_1 = 99$ kΩ, $R_2 = R_3 = 2$ kΩ and $R_4 = 200$ kΩ. The DRL resistances are $R_a = 100$ kΩ, $R_f = 10$ MΩ, and $R_o = 1$ MΩ. All resistance values have zero tolerance (0 % error).

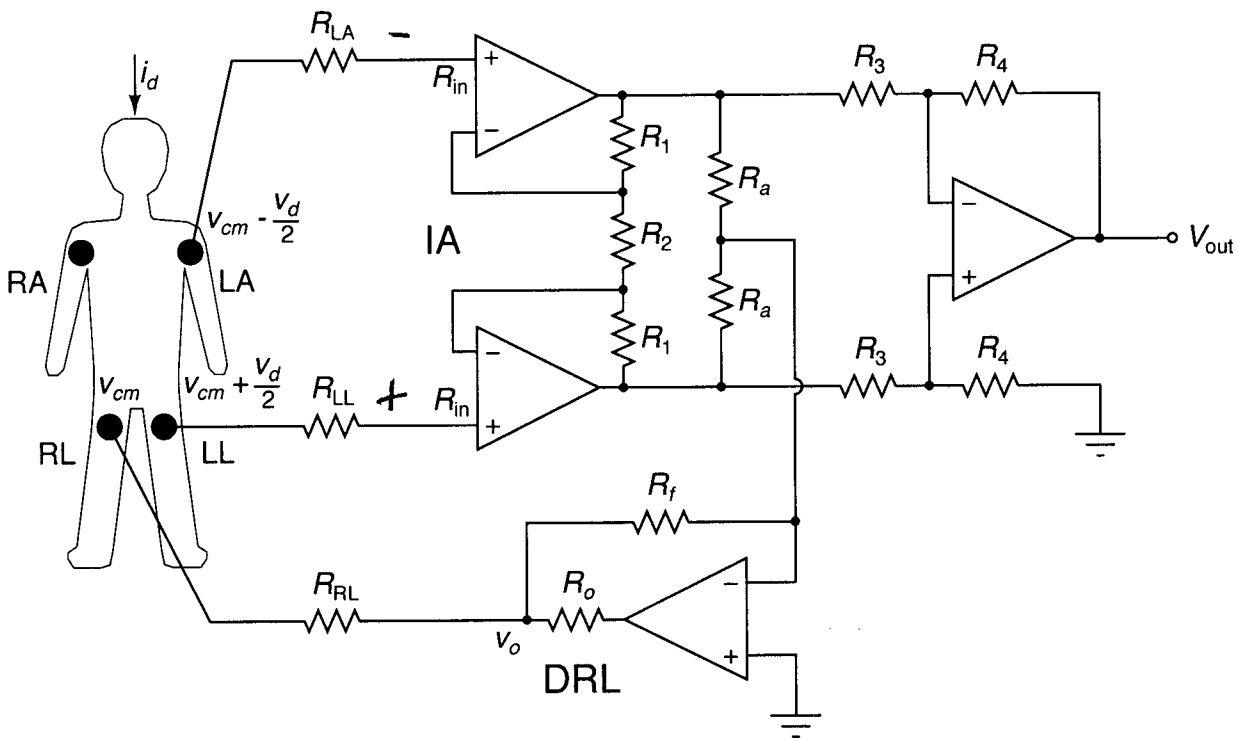

(a) [5 pts] What ECG lead does the IA output V_{out} represent, and with what voltage gain?

LL − LA = III

Voltage gain: $\left(1 + 2\frac{R_1}{R_2}\right) \cdot \frac{R_4}{R_3}$

$= (1 + 99) \cdot 100 = 10{,}000$ (80 dB)

(b) [5 pts] Find the rms amplitude of the displacement current i_d entering the body through 20 pF of coupling capacitance between the body and a nearby 120 V_{rms} 60 Hz power line.

$$i_d = C \frac{dV_{power}}{dt} = j\omega C \cdot V_{power}$$

$$\Rightarrow (i_d)_{rms} = 2\pi f C \cdot (V_{power})_{rms}$$

$$= 2\pi \; 60\,Hz \cdot 20\,pF \cdot 120\,V_{rms}$$

$$= 0.905\ \mu A_{rms}$$

(c) [10 pts] Find the effective resistance $R_{RL\,\text{eff}}$ to ground on the right leg electrode owing to the active grounding by the DRL, and the corresponding rms amplitude of the 60 Hz common-mode voltage v_{cm} in the body.

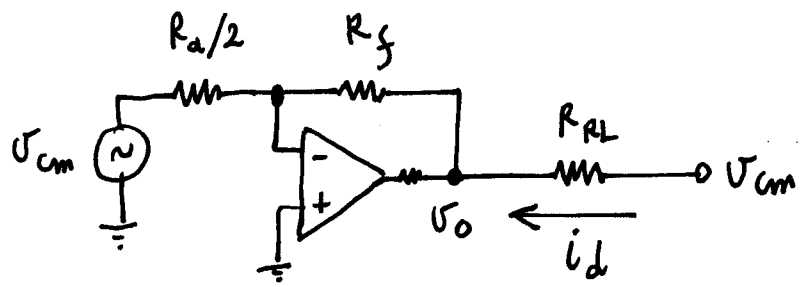

(Lecture 12)

$$v_o = v_{cm} - R_{RL}\, i_d = -\frac{R_f}{R_a/2} \cdot v_{cm}$$

$$\Rightarrow v_{cm}\left(1 + 2\frac{R_f}{R_a}\right) = R_{RL}\, i_d$$

$$\Rightarrow R_{RL\,eff} = \frac{v_{cm}}{i_d} = \frac{R_{RL}}{1 + 2\frac{R_f}{R_a}} = \frac{110\,k\Omega}{201} = 548\,\Omega$$

$$(v_{cm})_{rms} = R_{RL\,eff}\,(i_d)_{rms} = 548\,\Omega \; 0.905\,\mu A_{rms} = 495\,\mu V_{rms}$$

(d) [10 pts] The rms amplitude of the ECG differential signal on the lead is $v_d = 100\ \mu V_{rms}$. Find the corresponding signal-to-noise ratio (SNR) at the output of the instrumentation amplifier.

$$SNR_{out} = \frac{A_d \cdot (v_d)_{rms}}{A_c \cdot (v_{cm})_{rms}} = CMRR_{eff} \cdot \frac{(v_d)_{rms}}{(v_{cm})_{rms}}$$

$$CMRR_{eff} = \frac{R_{in}}{|R_{LA} - R_{LL}|} = \frac{10\ G\Omega}{(100-90)\ k\Omega} = 10^6$$

$$\Rightarrow SNR_{out} = 10^6 \cdot \frac{100\ \mu V_{rms}}{495\ \mu V_{rms}} = 2.02\ 10^5 \quad (106\ dB)$$

(e) [5 pts] What is the voltage on the RA electrode at the times when the IA output voltage V_{out} is zero?

$$V_{out} = 0 \Rightarrow v_d \approx 0$$

$\Rightarrow$ Entire body, including RA, is at v_{cm}

$(= 495\ \mu V_{rms})$

3. **[20 pts]** Consider the Clark electrode shown below for measurement of PO_2. The solution in the buffer is 0.1 mol/L KCl, and the voltage source V_s is -0.7 V. The following equations may be useful:

$$O_2 + 2\,H_2O + 4\,e^- \rightleftharpoons 2\,H_2O_2 + 4\,e^- \rightleftharpoons 4\,(OH)^-$$

$$4\,(OH)^- + 4\,KCl \rightleftharpoons 4\,KOH + 4\,Cl^-$$

$$4\,Ag + 4\,Cl^- \rightleftharpoons 4\,AgCl + 4\,e^-$$

$$I = 4\,F\,[O_2]\,\phi$$

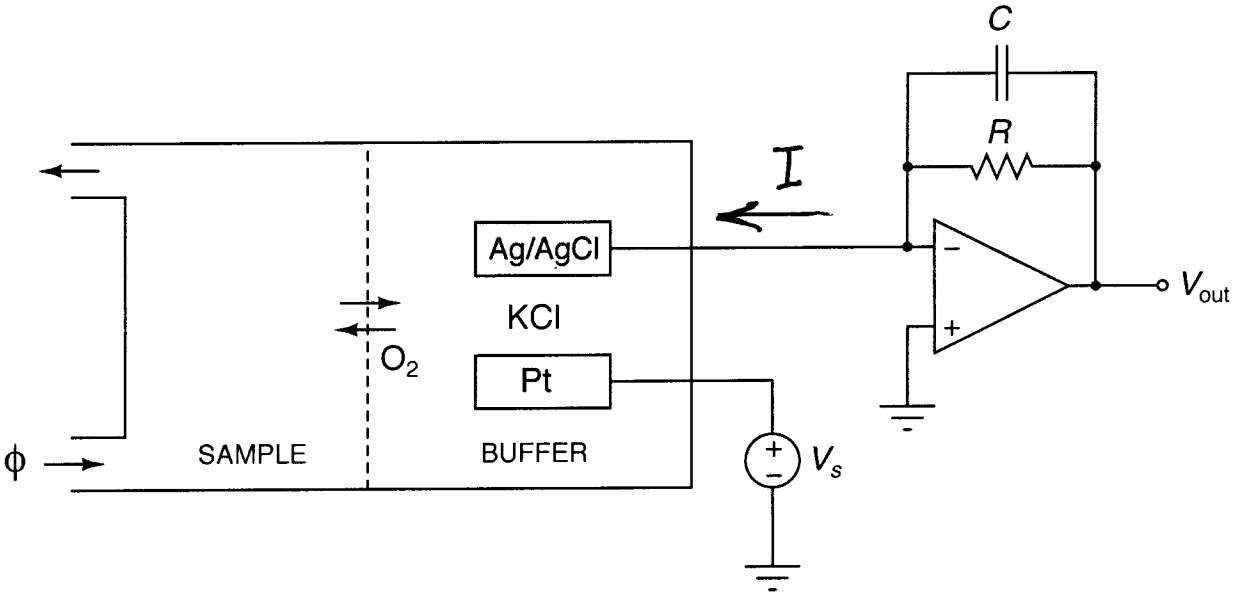

(a) [10 pts] Find the steady-state output voltage V_{out} as a function of oxygen concentration $[O_2]$ in the sample, and flow rate ϕ of the sample through the chamber. What is the role of the resistance R and the capacitance C in this setting?

$V_{out} = R \cdot I = 4RF\phi \cdot [O_2]$ in steady-state.

Role of R : transresistance gain in transducing redox current into voltage.

Role of C together with R : low-pass filtering with cut-off $f_c = \frac{1}{2\pi RC}$ to remove high-frequency noise.

(b) [10 pts] Now consider the transient response of a charge-mode integrating version of the Clark sensor which has the resistance removed ($R = \infty$) and the flow blocked ($\phi = 0$). For a zero initial charge $Q = C\,V_{out}$ across the capacitor and for a total initial amount M (in moles) of oxygen sealed in the chamber, find the voltage V_{out} at which the sensor settles after completing the transient. *Hint*: you may assume that all oxygen in the sample chamber is eventually consumed.

$$V_{out} = \frac{1}{C} Q = \frac{1}{C} \cdot (4 \cdot F \cdot M)$$

4 moles of electrons per mole of O_2

Charge of 1 mole of electrons

Moles of O_2

4. **[25 pts]** Circle the **best answer (only one answer per question)**:

(a) [4 pts] The Wilson Central Terminal (WTC) is:

i. A driven right leg voltage
ii. The average of the transversal ECG leads
iii. The common-mode of the frontal ECG
iv. A subway station in midtown Manhattan (I wish!)
v. None of the above

(b) [4 pts] Factors that determine the effectiveness of tonometry in noninvasively measuring blood pressure include:

i. The angle at which the transducer is placed on the blood vessel
ii. The depth of where the blood vessels are located
iii. The position of the transducer
iv. The size of the blood vessel in relation to the transducer
v. All of the above

(c) [4 pts] An electromagnetic flowmeter:

i. Uses magnetic induction of electropotentials from time-varying flux of a magnetic field
ii. Transduces the electromotive force on charged blood cells moving in a static magnetic field
iii. Produces an electric potential proportional to the dot product between blood velocity and magnetic field
iv. Offers direct and precise flow measurement as a cost-effective, non-invasive alternative to micro-tipped manometers
v. None of the above

(d) [4 pts] A chemical fibrosensor:

i. Is extensively used in the food industry to monitor fiber content for nutritional value
ii. Offers a direct method for measuring concentration of electroactive compounds in the blood stream
iii. Is more accurate than the Clark sensor in measuring partial pressure of oxygen in the blood
iv. Is an invasive instrument for measuring saturation of oxygen and other compounds carried by hemoglobin in the blood
v. Offers noninvasive ratiometric measurement of oxygen saturation using Beer's law of volume absorbance

(e) [9 pts] Indicate for each statement below whether it is true or false:

i. **TRUE** / **FALSE**: There is a notable difference in the Doppler effect when the source is moving towards the observer compared to when the observer is moving towards the source.

ii. **TRUE** / **FALSE**: Sphygmomanometer blood pressure measurement is highly sensitive to position and angle.

iii. **TRUE** / **FALSE**: The rapid bolus injection method for measuring cardiac output operates by relating rate of oxygen consumption to oxygen concentration sampled in arteries and veins.

iv. **TRUE** / **FALSE**: An indirect measure of SO_2 is derived from direct measurement of PO_2 through a saturating nonlinear transformation that depends on pH and temperature.

v. **TRUE** / **FALSE**: Between the systolic and diastolic blood pressure, the Korotkoff sounds are highly suppressed.

vi. **TRUE** / **FALSE**: The Ag/AgCl electrodes in the Severinghaus PCO_2 sensor gets consumed over time.

vii. **TRUE** / **FALSE**: The ISFET transduces concentration of ions into an electrical conductance.

viii. **TRUE** / **FALSE**: The resistance of fluid flow in the catheter tube is directly proportional to r^4, where r is the radius of the tube. ($1/r^4$!)

ix. **TRUE** / **FALSE**: Adding a resistance between the output of the opamp and the feedback resistance in a DRL amplifier reduces the maximum current that can be drawn from/into the body.